SPEED CONTROL MOTOR - SU SERIES

6W □60mm

K6□S6N□-SU

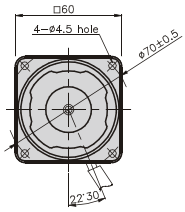

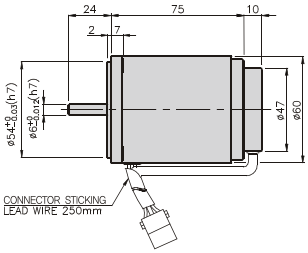

SPECIFICATIONS

6W continuous rating, four poles

Model		Voltage (V)	Frequency (Hz)	Speed Range (rpm)	Permissible Torque 1200rpm (N*m/Kgf*Cm)	Permissible Torque 90rpm (N*m/Kgf*Cm)	Start T. (N*m/Kgf*Cm)	Current (A)	Condenser (μF)
K6I□6NJ-SU	single-phase	100	50	90 ~ 1400	0.05/0.5	0.03/0.3	0.029/0.29	0.28	3
			60	90 ~ 1700				0.26	
K6I□6NU-SU		110	60	90 ~ 1700	0.05/0.5	0.03/0.3	0.03/0.3	0.24	2
		115							
K6I□6NL-SU		200	50	90 ~ 1400	0.05/0.5	0.029/0.29	0.03/0.3	0.19	0.8
			60	90 ~ 1700					
K6I□6NC-SU		220	50	90 ~ 1400	0.05/0.5	0.029/0.29	0.029/0.29	0.2	0.6
			60	90 ~ 1700			0.027/0.27		
		230	50	90 ~ 1400			0.029/0.29		
			60	90 ~ 1700					
K6I□6ND-SU		240	50	90 ~ 1400	0.05/0.5	0.029/0.29	0.03/0.3	0.21	0.5

* □ : SHAFT SHAPE (S : STRAIGHT, G : PINION)

RATED TORQUE OF GEARHEAD

● Single-phase 100V/115V

unit = above : N · m / below : kgfcm

Model / Motor/Gearhead	Ratio / Speed(rpm)	3	3.6	5	6	7.5	9	10	12.5	15	18	20	25	30	36	40	50	60	75	90	100	120	150	180	200	250
K6I□6N□-SU K6G□B(C)	1200	0.12 1.2	0.15 1.5	0.20 2.0	0.24 2.4	0.30 3.0	0.36 3.6	0.41 4.1	0.51 5.1	0.61 6.1	0.73 7.3	0.73 7.3	0.91 9.1	1.09 10.9	1.31 13.1	1.46 14.6	1.64 16.4	1.97 19.7	2.46 24.6	2.95 29.5	3 30	3 30	3 30	3 30	3 30	3 30
	90	0.07 0.7	0.08 0.8	0.12 1.2	0.14 1.4	0.18 1.8	0.21 2.1	0.23 2.3	0.26 2.6	0.32 3.2	0.42 4.2	0.42 4.2	0.53 5.3	0.63 6.3	0.76 7.6	0.85 8.5	0.95 9.5	1.14 11.4	1.43 14.3	1.71 17.1	1.90 19.0	2.28 22.8	2.85 28.5	3 30	3 30	3 30

● Single-phase 200V/240V

unit = above : N · m / below : kgfcm

Model / Motor/Gearhead	Ratio / Speed(rpm)	3	3.6	5	6	7.5	9	10	12.5	15	18	20	25	30	36	40	50	60	75	90	100	120	150	180	200	250
K6I□6N□-SU K6G□B(C)	1200	0.12 1.2	0.15 1.5	0.20 2.0	0.24 2.4	0.30 3.0	0.36 3.6	0.41 4.1	0.51 5.1	0.61 6.1	0.73 7.3	0.73 7.3	0.91 9.1	1.09 10.9	1.31 13.1	1.46 14.6	1.64 16.4	1.97 19.7	2.46 24.6	2.95 29.5	3 30	3 30	3 30	3 30	3 30	3 30
	90	0.07 0.7	0.08 0.8	0.12 1.2	0.14 1.4	0.18 1.8	0.21 2.1	0.23 2.3	0.29 2.9	0.35 3.5	0.42 4.2	0.42 4.2	0.53 5.3	0.63 6.3	0.76 7.6	0.85 8.5	0.95 9.5	1.14 11.4	1.43 14.3	1.71 17.1	1.90 19.0	2.28 22.8	2.85 28.5	3 30	3 30	3 30

* Gearhead and decimal gearhead are sold separately.
* The code in □ of gearhead model is for gear ratio.
* ▬ color indicates that the output shaft of the geared motor rotates in the same direction as the output shaft of the motor. Others indicate rotation in the opposite direction.
* If you are to have less ratio than the ratio in the table, you can install the decimal gearhead, which has one tenth of the ratio, between the gearhead and the motor. In this case, the permissible torque is 3N · m/30kgfcm.
* RPM is based on motor's synchronous rpm (50HZ:1500rpm, 60HZ:1800rpm) and calculated by dividing gear ratio. Actual rpm is 2~20% less than indicating rpm according to load size.

GEARHEADS

CONNECTION DIAGRAMS

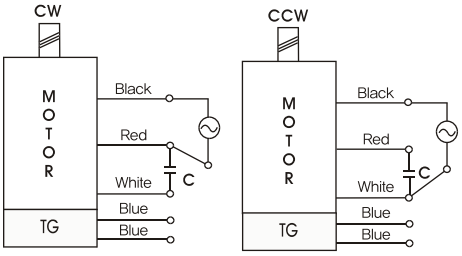

※The direction of motor rotation is as viewed from the front shaft end of the motor

DIMENSIONS

K6G□B(C)

K6IG6N□–SU + K6G□B(C)

DECIMAL GEARHEAD

K6G10BX

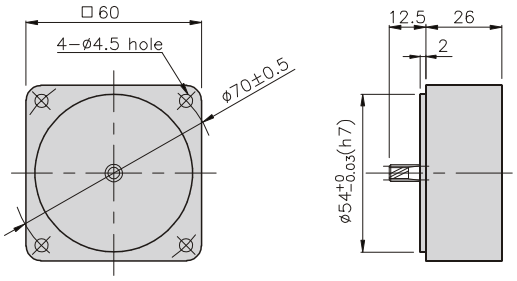

GEARHEAD

K6G□B(C)

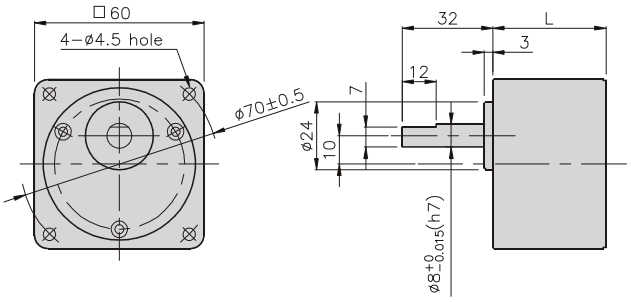

DIMENSION TABLE

PART No.	L	Application Model	Mounting BOLT
01	32	K6G3~18B(C)	M4 P0.7 X 50
02	40	K6G20~250B(C)	M4 P0.7 X 60
03	32	K6G10BX	M4 P0.7 X 85

WEIGHT

PART		WEIGHT(kg)
MOTOR		0.79
DECIMAL GEAR HEAD		0.22
GEAR HEAD	K6G3~18B(C)	0.26
	K6G20~40B(C)	0.33
	K6G50~250B(C)	0.36

K6IG6N□–SU + K6G□B(C)

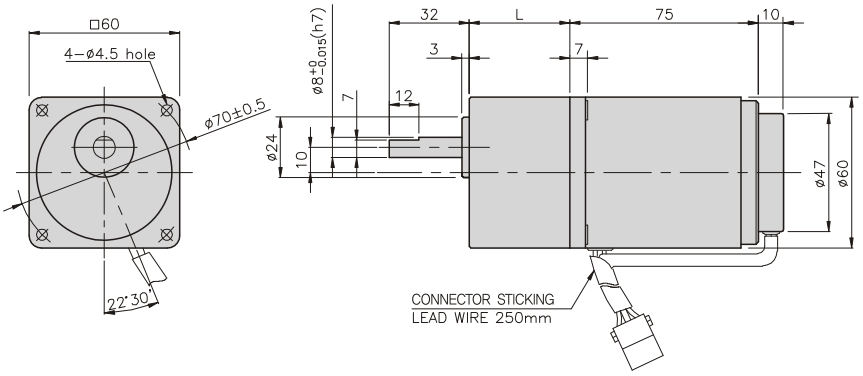

SPEED CONTROL MOTOR - SU SERIES

15W □70mm

K7□S15N□–SU

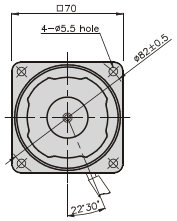

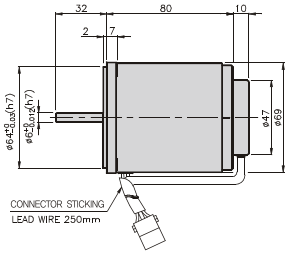

SPECIFICATIONS

15W continuous rating, four poles

Model		Voltage (V)	Frequency (Hz)	Speed Range (rpm)	Permissible Torque 1200rpm (N*m/Kgf*Cm)	Permissible Torque 90rpm (N*m/Kgf*Cm)	Start T. (N*m/Kgf*Cm)	Current (A)	Condenser (μF)
K7I□15NJ–SU	single–phase	100	50	90 ~ 1400	0.125/1.25	0.045/0.45	0.07/0.7	0.55	5
			60	90 ~ 1700				0.51	
K7I□15NU–SU		110	60	90 ~ 1700	0.125/1.25	0.045/0.45	0.07/0.7	0.47	4.5
		115					0.075/0.75	0.5	
K7I□15NL–SU		200	50	90 ~ 1400	0.125/1.25	0.04/0.4	0.08/0.8	0.3	1.5
			60	90 ~ 1700	0.105/1.05		0.085/0.85	0.31	
K7I□15NC–SU		220	50	90 ~ 1400	0.125/1.25	0.04/0.4	0.06/0.6	0.29	1
			60	90 ~ 1700	0.105/1.05			0.28	
		230	50	90 ~ 1400	0.125/1.25		0.065/0.65	0.3	
			60	90 ~ 1700	0.105/1.05			0.29	
K7I□15ND–SU		240	50	90 ~ 1400	0.125/1.25	0.04/0.4	0.07/0.7	0.32	1

* □ : SHAFT SHAPE (S : STRAIGHT, G : PINION)

RATED TORQUE OF GEARHEAD

● Single–phase 100V/115V

unit = above : N · m / below : kgfcm

Model / Motor/Gearhead	Ratio / Speed(rpm)	3	3.6	5	6	7.5	9	10	12.5	15	18	20	25	30	36	40	50	60	75	90	100	120	150	180	200
K7I□15N□–SU K7G□B(C)	1200	0.30 3.0	0.36 3.6	0.51 5.1	0.61 6.1	0.76 7.6	0.91 9.1	1.01 10.1	1.27 12.7	1.52 15.2	1.82 18.2	1.82 18.2	2.28 22.8	2.73 27.3	3.28 32.8	3.65 36.5	4.10 41.0	4.92 49.2	5 50	5 50	5 50	5 50	5 50	5 50	5 50
	90	0.11 1.1	0.13 1.3	0.18 1.8	0.22 2.2	0.27 2.7	0.33 3.3	0.36 3.6	0.46 4.6	0.55 5.5	0.66 6.6	0.66 6.6	0.82 8.2	0.98 9.8	1.18 11.8	1.31 13.1	1.48 14.8	1.77 17.7	2.21 22.1	2.66 26.6	2.95 29.5	3.54 35.4	4.43 44.3	5 50	5 50

● Single–phase 200V/240V

unit = above : N · m / below : kgfcm

Model / Motor/Gearhead	Ratio / Speed(rpm)		3	3.6	5	6	7.5	9	10	12.5	15	18	20	25	30	36	40	50	60	75	90	100	120	150	180	200
K7I□15N□–SU K7G□B(C)	1200	200V/220V/230V/240V/50Hz	0.30 3.0	0.36 3.6	0.51 5.1	0.61 6.1	0.76 7.6	0.91 9.1	1.01 10.1	1.27 12.7	1.52 15.2	1.82 18.2	1.82 18.2	2.28 22.8	2.73 27.3	3.28 32.8	3.65 36.5	4.10 41.0	4.92 49.2	6.15 61.5	5 50	5 50	5 50	5 50	5 50	5 50
		200V/220V/230V/60Hz	0.26 2.6	0.31 3.1	0.43 4.3	0.51 5.1	0.64 6.4	0.77 7.7	0.85 8.5	1.06 10.6	1.28 12.8	1.53 15.3	1.53 15.3	1.91 19.1	2.30 23.0	2.76 27.6	3.06 30.6	3.44 34.4	4.13 41.3	5 50	5 50	5 50	5 50	5 50	5 50	5 50
	90		0.10 1.0	0.12 1.2	0.16 1.6	0.19 1.9	0.24 2.4	0.29 2.9	0.32 3.2	0.41 4.1	0.49 4.9	0.58 5.8	0.58 5.8	0.73 7.3	0.87 8.7	1.05 10.5	1.17 11.7	1.31 13.1	1.57 1.57	1.97 19.7	2.36 23.6	2.62 26.2	3.15 31.5	3.94 39.4	4.72 47.2	5 50

* Gearhead and decimal gearhead are sold separately.
* The code in □ of gearhead model is for gear ratio.
* color indicates that the output shaft of the geared motor rotates in the same direction as the output shaft of the motor. Others indicate rotation in the opposite direction.
* If you are to have less ratio than the ratio in the table, you can install the decimal gearhead, which has one tenth of the ratio, between the gearhead and the motor. In this case, the permissible torque is 5N · m/50kgfcm.
* RPM is based on motor's synchronous rpm (50HZ:1500rpm, 60HZ:1800rpm) and calculated by dividing gear ratio. Actual rpm is 2~20% less than indicating rpm according to load size.

GEARHEADS

CONNECTION DIAGRAMS

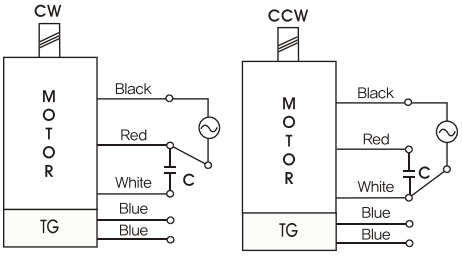

※The direction of motor rotation is as viewed from the front shaft end of the motor

DIMENSIONS

K7G□B(C)

K7IG15N□–SU + K7G□B(C)

DECIMAL GEARHEAD

K7G10BX

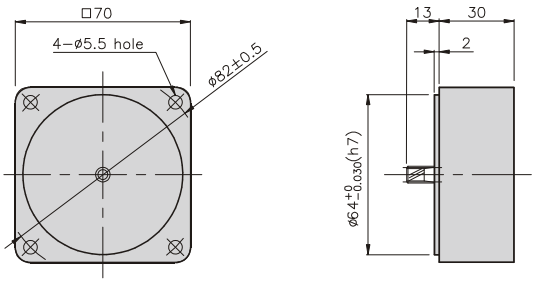

GEARHEAD

K7G□B(C)

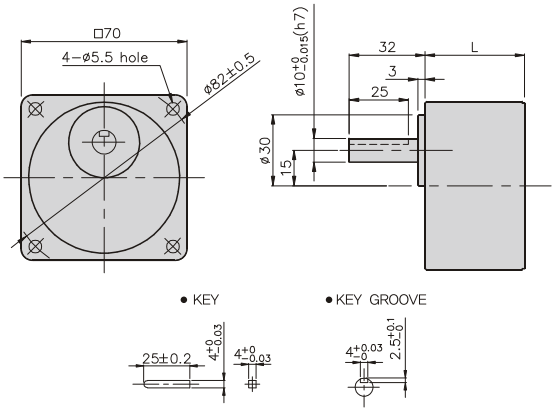

DIMENSION TABLE

PART No.	L	Application Model	Mounting BOLT
01	32	K7G3~18B(C)	M5 P0.8 X 50
02	40	K7G20~200B(C)	M5 P0.8 X 65
03	32	K7G10BX	M5 P0.8 X 90

WEIGHT

PART		WEIGHT(kg)
MOTOR		1.16
DECIMAL GEAR HEAD		0.32
GEAR HEAD	K7G3~18B(C)	0.36
	K7G20~40B(C)	0.46
	K7G50~200B(C)	0.51

K7IG15N□–SU + K7G□B(C)

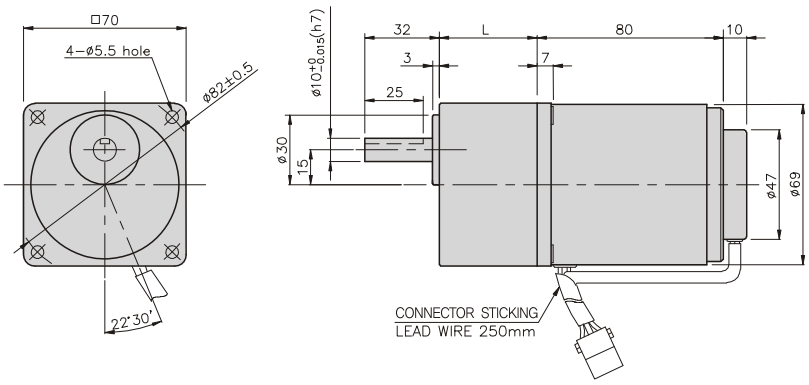

SPEED CONTROL MOTOR - SU SERIES

25W □80mm

K8□S25N□–SU

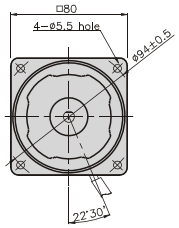

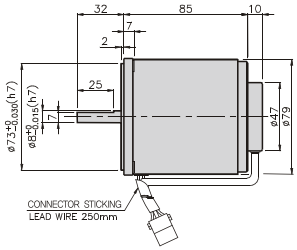

SPECIFICATIONS

25W continuous rating, four poles

Model		Voltage (V)	Frequency (Hz)	Speed Range (rpm)	Permissible Torque 1200rpm (N*m/Kgf*Cm)	Permissible Torque 90rpm (N*m/Kgf*Cm)	Start T. (N*m/Kgf*Cm)	Current (A)	Condenser (μF)
K8I□25NJ–SU	single–phase	100	50	90 ~ 1400	0.2/2	0.05/0.5	0.08 0.8	0.8	7
			60	90 ~ 1700				0.75	
K8I□25NU–SU		110	60	90 ~ 1700	0.2/2	0.05/0.5	0.08 0.8	0.67	5
		115						0.68	
K8I□25NL–SU		200	50	90 ~ 1400	0.19/1.9	0.047/0.47	0.085 0.085	0.36	1.8
			60	90 ~ 1700	0.13/1.3	0.043/0.43		0.38	
K8I□25NC–SU		220	50	90 ~ 1400	0.19/1.9	0.047/0.47	0.08 0.8	0.38	1.5
			60	90 ~ 1700	0.13/1.3	0.043/0.43		0.35	
		230	50	90 ~ 1400	0.19/1.9	0.047/0.47	0.087 0.87	0.4	
			60	90 ~ 1700	0.13/1.3	0.043/0.43		0.36	
K8I□25ND–SU		240	50	90 ~ 1400	0.19/1.9	0.047/0.47	0.08 0.8	0.42	1.2

* □ : SHAFT SHAPE (S : STRAIGHT, G : PINION)

RATED TORQUE OF GEARHEAD

● Single–phase 100V/115V

unit = above : N · m / below : kgfcm

Model / Motor/Gearhead	Ratio / Speed(rpm)	3	3.6	5	6	7.5	9	10	12.5	15	18	20	25	30	36	40	50	60	75	90	100	120	150	180	200	250
K8I□25N□–SU K8G□B(C)	1200	0.49 4.9	0.58 5.8	0.81 8.1	0.97 9.7	1.22 12.2	1.46 14.6	1.62 16.2	2.03 20.3	2.43 24.3	2.92 29.2	2.92 29.2	3.65 36.5	4.37 43.7	5.25 52.5	5.83 58.3	6.56 65.6	7.87 78.7	8 80	8 80	8 80	8 80	8 80	8 80	8 80	8 80
	90	0.12 1.2	0.15 1.5	0.20 2.0	0.24 2.4	0.30 3.0	0.36 3.6	0.41 4.1	0.51 5.1	0.61 6.1	0.73 7.3	0.73 7.3	0.91 9.1	1.09 10.9	1.31 13.1	1.46 14.6	1.64 16.4	1.97 19.7	2.46 24.6	2.95 29.5	3.28 32.8	3.94 39.4	4.92 49.2	5.90 59.0	6.56 65.6	8 80

● Single–phase 200V/240V

unit = above : N · m / below : kgfcm

Model / Motor/Gearhead	Ratio / Speed(rpm)		3	3.6	5	6	7.5	9	10	12.5	15	18	20	25	30	36	40	50	60	75	90	100	120	150	180	200	250
K8I□25N□–SU K8G□B(C)	1200	200V/220V/230V 240V/50Hz	0.46 4.9	0.55 5.5	0.77 7.7	0.92 9.2	1.15 11.5	1.39 13.9	1.54 15.4	1.92 19.2	2.31 23.1	2.77 27.7	2.77 27.7	3.46 34.6	4.16 41.6	4.99 49.9	5.54 55.4	6.23 62.3	7.48 74.8	9.35 93.5	11.22 112.2	8 80	8 80	8 80	8 80	8 80	8 80
		200V/220V 230V/60Hz	0.32 3.2	0.38 3.8	0.53 5.3	0.63 6.3	0.79 7.9	0.95 9.5	1.05 10.5	1.32 13.2	1.58 15.8	1.90 19.0	1.90 19.0	2.37 23.7	2.84 28.4	3.41 34.1	3.79 37.9	4.26 42.6	5.12 51.2	6.40 64.0	7.68 76.8	8 80	8 80	8 80	8 80	8 80	8 80
	90	200V/220V/230V 240V/50Hz	0.11 1.1	0.14 1.4	0.19 1.9	0.23 2.3	0.29 2.9	0.34 3.4	0.38 3.8	0.48 4.8	0.57 5.7	0.69 6.9	0.69 6.9	0.86 8.6	1.03 10.3	1.23 12.3	1.37 13.7	1.54 15.4	1.85 18.5	2.31 23.1	2.78 27.8	3.08 30.8	3.70 37.0	4.63 46.3	5.55 55.5	6.17 61.7	7.71 77.1
		200V/220V 230V/60Hz	0.10 1.0	0.13 1.3	0.17 1.7	0.21 2.1	0.26 2.6	0.31 3.1	0.35 3.5	0.44 4.4	0.52 5.2	0.63 6.3	0.63 6.3	0.78 7.8	0.94 9.4	1.13 11.3	1.25 12.5	1.41 14.1	1.69 16.9	2.12 21.2	2.54 25.4	2.82 28.2	3.39 33.9	4.23 42.3	5.08 50.8	5.64 56.4	7.05 70.5

* Gearhead and decimal gearhead are sold separately.
* The code in □ of gearhead model is for gear ratio.
* ▬ color indicates that the output shaft of the geared motor rotates in the same direction as the output shaft of the motor. Others indicate rotation in the opposite direction.
* If you are to have less ratio than the ratio in the table, you can install the decimal gearhead, which has one tenth of the ratio, between the gearhead and the motor. In this case, the permissible torque is 8N · m/80kgfcm. But, if you install 1/25~1/40 gearhead, the permissible torque is 6N · m/60kgfcm.
* RPM is based on motor's synchronous rpm (50HZ:1500rpm, 60HZ:1800rpm) and calculated by dividing gear ratio. Actual rpm is 2~20% less than indicating rpm according to load size.

GEARHEADS

CONNECTION DIAGRAMS

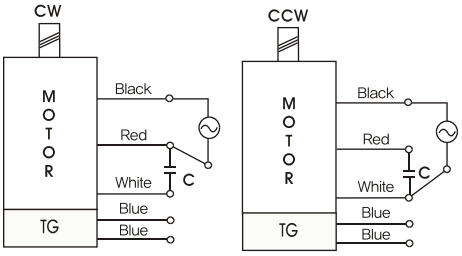

※The direction of motor rotation is as viewed from the front shaft end of the motor

DIMENSIONS

K8G□B(C)

K8IG25N□–SU + K8G□B(C)

DECIMAL GEARHEAD

K8G10BX

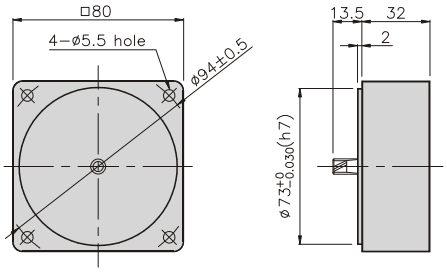

GEARHEAD

K8G□B(C)

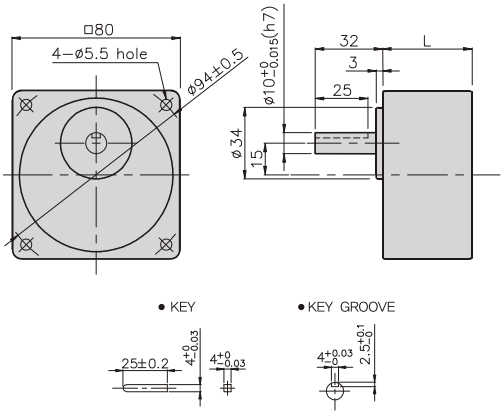

DIMENSION TABLE

PART No.	L	Application Model	Mounting BOLT
01	32	K8G3~18B(C)	M5 P0.8 X 50
02	42.5	K8G20~250B(C)	M5 P0.8 X 65
03	32	K8G10BX	M5 P0.8 X 95

WEIGHT

PART		WEIGHT(kg)
MOTOR		1.60
DECIMAL GEAR HEAD		0.46
GEAR HEAD	K8G3~18B(C)	0.51
	K8G20~40B(C)	0.64
	K8G50~250B(C)	0.70

K8IG25N□–SU + K8G□B(C)

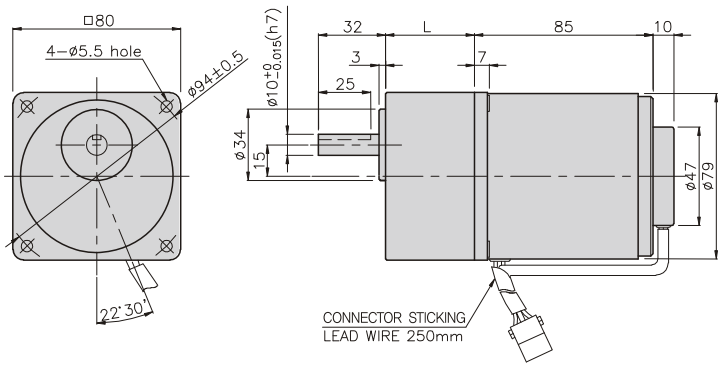

SPEED CONTROL MOTOR - SU SERIES

40W □90mm

K9□S40N□–SU

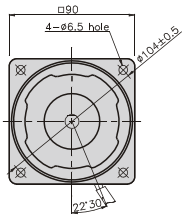

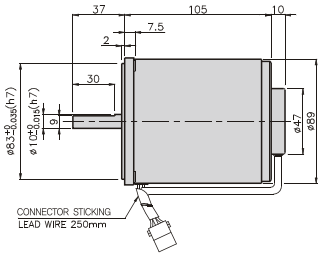

SPECIFICATIONS

40W continuous rating, four poles

Model		Voltage (V)	Frequency (Hz)	Speed Range (rpm)	Permissible Torque 1200rpm (N∗m/Kgf∗Cm)	Permissible Torque 90rpm (N∗m/Kgf∗Cm)	Start T. (N∗m/Kgf∗Cm)	Current (A)	Condenser (μF)
K9I□40NJ–SU	single–phase	100	50	90 ~ 1400	0.26/2.6	0.07/0.7	0.14/1.4	1.3	12
			60	90 ~ 1700					
K9I□40NU–SU		110	60	90 ~ 1700	0.26/2.6	0.07/0.7	0.13/1.3	1.1	8
		115							
K9I□40NL–SU		200	50	90 ~ 1400	0.3/3	0.063/0.63	0.14/1.4	0.6	3
			60	90 ~ 1700	0.23/2.3			0.62	
K9I□40NC–SU		220	50	90 ~ 1400	0.3/3	0.063/0.63	0.14/1.4	0.58	2.5
			60	90 ~ 1700	0.23/2.3		0.13/1.3	0.62	
		230	50	90 ~ 1400	0.3/3		0.14/1.4	0.6	
			60	90 ~ 1700	0.23/2.3		0.13/1.3	0.62	
K9I□40ND–SU		240	50	90 ~ 1400	0.3/3	0.063/6.3	0.13/1.3	0.6	2

∗ □ : SHAFT SHAPE (S : STRAIGHT, G : PINION)

RATED TORQUE OF GEARHEAD

● Single–phase 100V/115V

unit = above : N · m / below : kgfcm

Model / Motor/Gearhead	Ratio / Speed(rpm)	3	3.6	5	6	7.5	9	10	12.5	15	18	20	25	30	36	40	50	60	75	90	100	120	150	180	200
K9I□40N□–SU K9G□B(C)	1200	0.63 6.3	0.76 7.6	1.05 10.5	1.26 12.6	1.58 15.8	1.90 19.0	2.11 21.1	2.63 26.3	3.16 31.6	3.79 37.9	3.79 37.9	4.74 47.7	5.69 56.9	6.82 68.2	7.58 75.8	8.53 58.3	10 100	10 100	10 100	10 100	10 100	10 100	10 100	10 100
	90	0.17 1.7	0.20 2.0	0.28 2.8	0.34 3.4	0.43 4.3	0.51 5.1	0.57 5.7	0.71 7.1	0.85 8.5	1.02 10.2	1.02 10.2	1.28 12.8	1.53 15.3	1.84 18.4	2.04 20.4	2.30 23.0	2.76 27.6	3.44 34.4	4.13 41.3	4.59 45.9	5.51 55.1	6.89 68.9	8.27 82.7	9.19 91.9

● Single–phase 200V/240V

unit = above : N · m / below : kgfcm

Model / Motor/Gearhead	Ratio / Speed(rpm)		3	3.6	5	6	7.5	9	10	12.5	15	18	20	25	30	36	40	50	60	75	90	100	120	150	180	200
K9I□40N□–SU K9G□B(C)	1200	200V/220V/230V/240V/50Hz	0.73 7.3	0.87 8.7	1.22 12.2	1.46 14.6	1.82 18.2	2.19 21.9	2.43 24.3	3.04 30.4	3.65 36.5	4.37 43.7	4.37 43.7	5.47 54.7	6.56 65.6	7.87 78.7	8.75 87.5	10 100	10 100	10 100	10 100	10 100	10 100	10 100	10 100	10 100
		200V/220V/230V/60Hz	0.56 5.6	0.67 6.7	0.93 9.3	1.12 11.2	1.40 14.0	1.68 16.8	1.86 18.6	2.33 23.3	2.79 27.9	3.35 33.5	3.35 33.5	4.19 41.9	5.03 50.3	6.04 60.4	6.71 67.1	8.38 83.8	10 100	10 100	10 100	10 100	10 100	10 100	10 100	10 100
	90		0.15 1.5	0.18 1.8	0.26 2.6	0.31 3.1	0.38 3.8	0.46 4.6	0.51 5.1	0.64 6.4	0.77 7.7	0.92 9.2	0.92 9.2	1.15 11.5	1.38 13.8	1.65 16.5	1.84 18.4	2.07 20.7	2.48 24.8	3.10 31.0	3.72 37.2	4.13 41.3	4.96 49.6	6.20 62.0	7.44 74.4	8.27 82.7

∗ Gearhead and decimal gearhead are sold separately.
∗ The code in □ of gearhead model is for gear ratio.
∗ ▬ color indicates that the output shaft of the geared motor rotates in the same direction as the output shaft of the motor. Others indicate rotation in the opposite direction.
∗ If you are to have less ratio than the ratio in the table, you can install the decimal gearhead, which has one tenth of the ratio, between the gearhead and the motor. In this case, the permissible torque is 10N · m/100kgfcm.
∗ RPM is based on motor's synchronous rpm (50HZ:1500rpm, 60HZ:1800rpm) and calculated by dividing gear ratio. Actual rpm is 2~20% less than indicating rpm according to load size.

GEARHEADS

CONNECTION DIAGRAMS

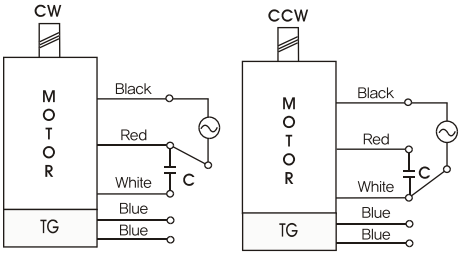

※The direction of motor rotation is as viewed from the front shaft end of the motor

DIMENSIONS

K9G□B(C)

K9IG40N□-SU + K9G□B(C)

DECIMAL GEARHEAD

K9G10BX

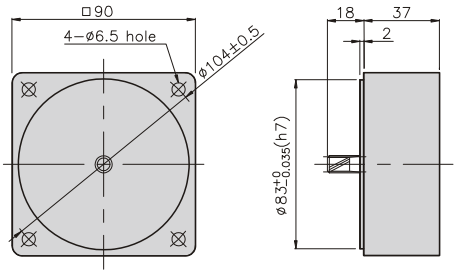

GEARHEAD

K9G□B(C)

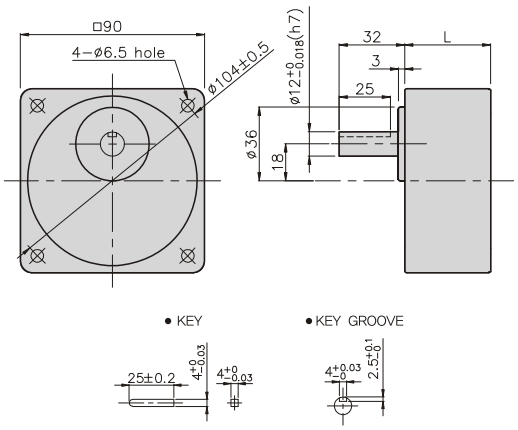

DIMENSION TABLE

PART No.	L	Application Model	Mounting BOLT
01	42	K9G3~18B(C)	M6 P1.0 X 65
02	60	K9G20~200B(C)	M6 P1.0 X 80
03	37	K9G10BX	M6 P1.0 X 120

WEIGHT

PART		WEIGHT(kg)
MOTOR		2.48
DECIMAL GEAR HEAD		0.60
GEAR HEAD	K9G3~18B(C)	0.78
	K9G20~40B(C)	1.04
	K9G50~200B(C)	1.14

K9IG40N□-SU + K9G□B(C)

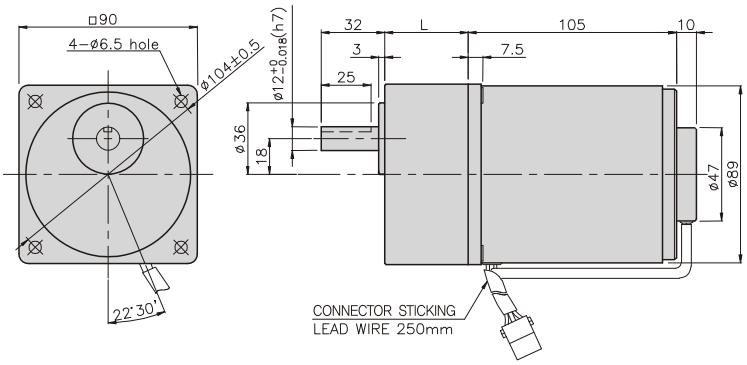

SPEED CONTROL MOTOR - SU SERIES

60W □90mm

K9□S60F□-SU

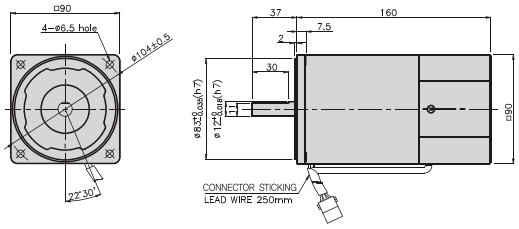

SPECIFICATIONS

60W continuous rating, four poles

Model		Voltage (V)	Frequency (Hz)	Speed Range (rpm)	Permissible Torque 1200rpm (N*m/Kgf*Cm)	Permissible Torque 90rpm (N*m/Kgf*Cm)	Start T. (N*m/Kgf*Cm)	Current (A)	Condenser (μF)
K9I□60FJ-SU	single-phase	100	50	90 ~ 1400	0.45/4.5	0.15/1.5	0.24/2.4	2.3	20
			60	90 ~ 1700			0.21/2.1		
K9I□60FU-SU		110	60	90 ~ 1700	0.45/4.5	0.15/1.5	0.285/2.85	2	16
		115						2.1	
K9I□60FL-SU		200	50	90 ~ 1400	0.49/4.9	0.14/1.4	0.24/2.4	1.2	5
			60	90 ~ 1700	0.45/4.5	0.16/1.6	0.21/2.1		
K9I□60FC-SU		220	50	90 ~ 1400	0.49/4.9	0.14/1.4	0.24/2.4	0.91	4
			60	90 ~ 1700	0.45/4.5	0.16/1.6	0.21/2.1	0.9	
		230	50	90 ~ 1400	0.49/4.9	0.14/1.4	0.24/2.4	1	
			60	90 ~ 1700	0.45/4.5	0.16/1.6	0.24/2.4		
K9I□60FD-SU		240	50	90 ~ 1400	0.49/4.9	0.14/1.4	0.28/2.8	1.1	4

* □ : SHAFT SHAPE (S : STRAIGHT, G : PINION)

RATED TORQUE OF GEARHEAD

● Single-phase 100V/115V

unit = above : N · m / below : kgfcm

Model / Motor/Gearhead	Ratio / Speed(rpm)	3	3.6	5	6	7.5	9	10	12.5	15	18	20	25	30	36	40	50	60	75	90	100	120	150	180	200
K9I□60F□-SU K9P□B, BF	1200	1.09 10.9	1.31 13.1	1.82 18.2	2.19 21.9	2.73 27.3	3.28 32.8	3.65 36.5	4.10 41.0	4.92 49.2	5.90 59.0	6.56 65.6	7.38 73.8	8.86 88.6	10.63 106.3	11.81 118.1	14.76 147.6	17.71 177.1	20 200	20 200	20 200	20 200	20 200	20 200	20 200
	90	0.36 3.6	0.44 4.4	0.61 6.1	0.73 7.3	0.91 9.1	1.09 10.9	1.22 12.2	1.37 13.7	1.64 16.4	1.97 19.7	2.19 21.9	2.46 24.6	2.95 29.5	3.54 35.4	3.94 39.4	4.92 49.2	5.90 59.0	6.64 66.4	7.97 79.7	8.86 88.6	10.63 106.3	13.29 132.9	15.94 159.4	17.71 177.1

● Single-phase 200V/240V

unit = above : N · m / below : kgfcm

Model / Motor/Gearhead	Ratio / Speed(rpm)		3	3.6	5	6	7.5	9	10	12.5	15	18	20	25	30	36	40	50	60	75	90	100	120	150	180	200
K9I□60F□-SU K9P□B, BF	1200	200V/220V/230V 240V/50Hz	1.19 11.9	1.43 14.3	1.98 19.8	2.38 23.8	2.98 29.8	3.57 35.7	3.97 39.7	4.47 44.7	5.36 53.6	6.43 64.3	7.14 71.4	8.04 80.4	9.64 96.4	11.57 115.7	12.86 128.6	16.07 160.7	19.29 192.9	20 200	20 200	20 200	20 200	20 200	20 200	20 200
		200V/220V 230V/60Hz	1.09 10.9	1.31 13.1	1.82 18.2	2.19 21.9	2.73 27.3	3.28 32.8	3.65 36.5	4.10 41.0	4.92 49.2	5.90 59.0	6.56 65.6	7.38 73.8	8.86 88.6	10.63 106.3	11.81 118.1	14.76 147.6	17.71 177.1	20 200	20 200	20 200	20 200	20 200	20 200	20 200
	90	200V/220V/230V 240V/50Hz	0.34 3.4	0.41 4.1	0.57 5.7	0.68 6.8	0.85 8.5	1.02 10.2	1.13 11.3	1.28 12.8	1.53 15.3	1.84 18.4	2.04 20.4	2.30 23.0	2.76 27.6	3.31 33.1	3.67 36.7	4.59 45.9	5.51 55.1	6.20 62.0	7.44 74.4	8.27 82.7	9.92 99.2	12.40 124.0	14.88 148.8	16.53 165.3
		200V/220V 230V/60Hz	0.39 3.9	0.47 4.7	0.65 6.5	0.78 7.8	0.97 9.7	1.17 11.7	1.30 13.0	1.46 14.6	1.75 17.5	2.10 21.0	2.33 23.3	2.62 26.2	3.15 31.5	3.78 37.8	4.20 42.0	5.25 52.5	6.30 63.0	7.09 70.9	8.50 85.0	9.45 94.5	11.34 113.4	14.17 141.7	17.01 170.1	18.90 189.0

* Gearhead and decimal gearhead are sold separately.
* The code in □ of gearhead model is for gear ratio.
* ▬ color indicates that the output shaft of the geared motor rotates in the same direction as the output shaft of the motor. Others indicate rotation in the opposite direction.
* If you are to have less ratio than the ratio in the table, you can install the decimal gearhead, which has one tenth of the ratio, between the gearhead and the motor. In this case, the permissible torque is 20N · m/200kgfcm.
* RPM is based on motor's synchronous rpm (50HZ:1500rpm, 60HZ:1800rpm) and calculated by dividing gear ratio. Actual rpm is 2~20% less than indicating rpm according to load size.

GEARHEADS

CONNECTION DIAGRAMS

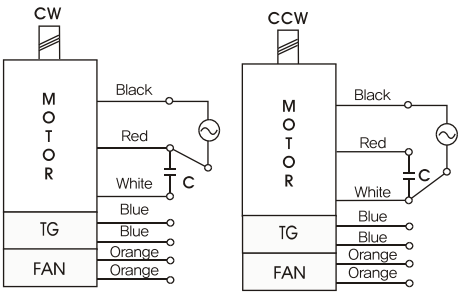

※The direction of motor rotation is as viewed from the front shaft end of the motor

DIMENSIONS

K9P□B

K9P□BF

DECIMAL GEARHEAD

K9P10BX

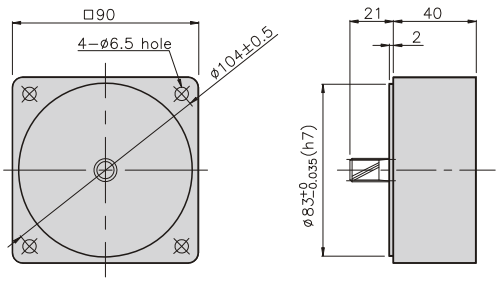

GEARHEAD

K9P□B

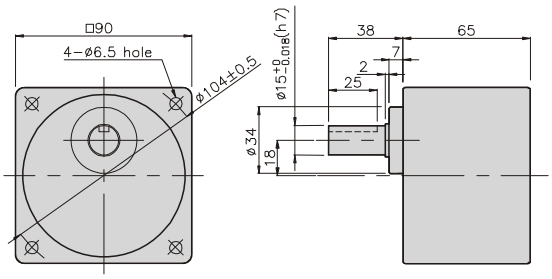

GEARHEAD

K9P□BF

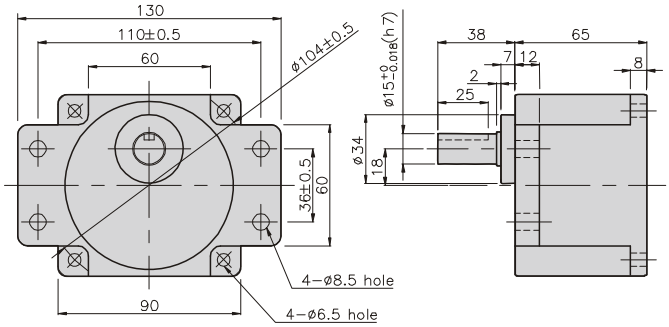

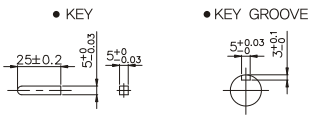

GEARHEADS

DIMENSIONS

K9IP60F□-SU + K9P□B

K9IP60F□-SU + K9P□BF

K9IP60F□-SU + K9P□B

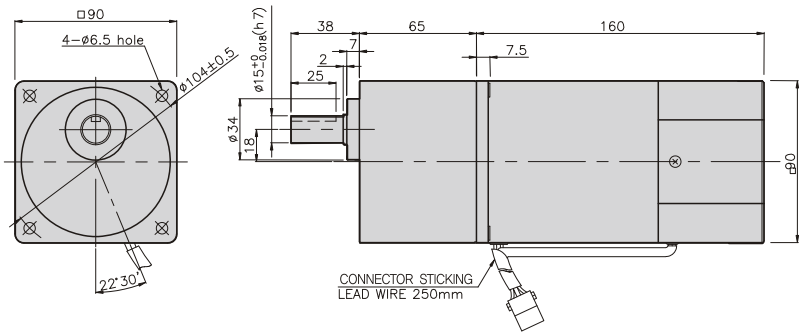

DIMENSION TABLE

PART No.	L	Application Model	Mounting BOLT
01	65	K9P3~200B	M6 P1.0 X 95
02	40	K9P10BX	M6 P1.0 X 140

WEIGHT

PART		WEIGHT(kg)
MOTOR		3.06
DECIMAL GEAR HEAD		0.62
GEAR HEAD	K9P3~10B	1.22
	K9P12.5~20B	1.32
	K9P25~60B	1.42
	K9P75~200B	1.45

K9IP60F□-SU + K9P□BF

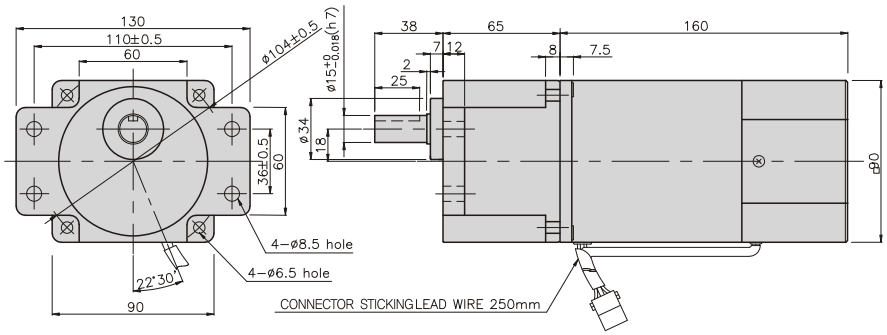

DIMENSION TABLE

PART No.	L	Application Model	Mounting BOLT
01	65	K9P3~200BF	M6 P1.0 X 25
02	40	K9P10BX	M6 P1.0 X 65

WEIGHT

PART		WEIGHT(kg)
MOTOR		3.58
DECIMAL GEAR HEAD		0.62
GEAR HEAD	K9P3~10BF	1.22
	K9P12.5~20BF	1.30
	K9P25~60BF	1.42
	K9P75~200BF	1.44

SPEED CONTROL MOTOR - SU SERIES

90W □90mm

K9□S90F□-SU

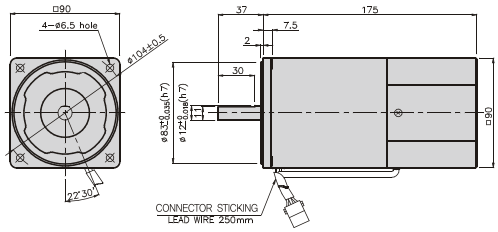

SPECIFICATIONS

90W continuous rating, four poles

Model		Voltage (V)	Frequency (Hz)	Speed Range (rpm)	Permissible Torque 1200rpm (N*m/Kgf*Cm)	Permissible Torque 90rpm (N*m/Kgf*Cm)	Start T. (N*m/Kgf*Cm)	Current (A)	Condenser (μF)
K9I□90FJ-SU	single-phase	100	50	90 ~ 1400	0.7/7	0.23/2.3	0.36/3.6	3.2	30
			60	90 ~ 1700					
K9I□90FU-SU		110	60	90 ~ 1700	0.7/7	0.23/2.3	0.35/3.5	2.6	20
		115							
K9I□90FL-SU		200	50	90 ~ 1400	0.73/7.3	0.23/2.3	0.36/3.6	1.3	7
			60	90 ~ 1700		0.26/2.6			
K9I□90FC-SU		220	50	90 ~ 1400	0.73/7.3	0.23/2.3	0.36/3.6	1.1	6
			60	90 ~ 1700		0.26/2.6		1.2	
		230	50	90 ~ 1400		0.23/2.3	0.4/4		
			60	90 ~ 1700		0.26/2.6			
K9I□90FD-SU		240	50	90 ~ 1400	0.73/7.3	0.23/2.3	0.36/3.6	1.2	5

* □ : SHAFT SHAPE (S : STRAIGHT, G : PINION)

RATED TORQUE OF GEARHEAD

● Single-phase 100V/115V

unit = above : N · m / below : kgfcm

Model / Motor/Gearhead	Ratio / Speed(rpm)	3	3.6	5	6	7.5	9	10	12.5	15	18	20	25	30	36	40	50	60	75	90	100	120	150	180	200
K9I□90F□-SU K9P□B, BF	1200	1.70 17.0	2.04 20.4	2.84 28.4	3.40 34.0	4.25 42.5	5.10 51.0	5.67 56.7	6.38 63.8	7.65 76.5	9.19 91.9	10.21 102.1	11.48 114.8	13.78 137.8	16.53 165.3	18.37 183.7	20 200	20 200	20 200	20 200	20 200	20 200	20 200	20 200	20 200
	90	0.56 5.6	0.67 6.7	0.93 9.3	1.12 11.2	1.40 14.0	1.68 16.8	1.86 18.6	2.10 21.0	2.52 25.2	3.02 30.2	3.35 33.5	3.77 37.7	4.53 45.3	5.43 54.3	6.04 60.4	7.55 75.5	9.05 90.5	10.19 101.9	12.22 122.2	13.58 135.8	16.30 163.0	20 200	20 200	20 200

● Single-phase 200V/240V

unit = above : N · m / below : kgfcm

Model / Motor/Gearhead	Ratio / Speed(rpm)		3	3.6	5	6	7.5	9	10	12.5	15	18	20	25	30	36	40	50	60	75	90	100	120	150	180	200
K9I□90F□-SU K9P□B, BF	1200		1.77 17.7	2.13 21.3	2.96 29.6	3.55 35.5	4.43 44.3	5.32 53.2	5.91 59.1	6.65 66.5	7.98 79.8	9.58 95.8	10.64 106.4	11.97 119.7	14.37 143.7	17.24 172.4	19.16 191.6	20 200	20 200	20 200	20 200	20 200	20 200	20 200	20 200	20 200
	90	200V/220V/ 230V/240V/50Hz	0.56 5.6	0.67 6.7	0.93 9.3	1.12 11.2	1.40 14.0	1.68 16.8	1.86 18.6	2.10 21.0	2.52 25.2	3.02 30.2	3.35 33.5	3.77 37.7	4.53 45.3	5.43 54.3	6.04 60.4	7.55 75.5	9.05 90.5	10.19 101.9	12.22 122.2	13.58 135.8	16.30 163.0	20 200	20 200	20 200
		200V/220V/ 230V/60Hz	0.63 6.3	0.76 7.6	1.05 10.5	1.26 12.6	1.58 15.8	1.90 19.0	2.11 21.1	2.37 23.7	2.84 28.4	3.41 34.1	3.79 37.9	4.26 42.6	5.12 51.2	6.14 61.4	6.82 68.2	8.53 85.3	10.24 102.4	11.51 115.1	13.82 138.2	15.35 153.5	18.42 184.2	20 200	20 200	20 200

* Gearhead and decimal gearhead are sold separately.
* The code in □ of gearhead model is for gear ratio.
* ▬ color indicates that the output shaft of the geared motor rotates in the same direction as the output shaft of the motor. Others indicate rotation in the opposite direction.
* If you are to have less ratio than the ratio in the table, you can install the decimal gearhead, which has one tenth of the ratio, between the gearhead and the motor. In this case, the permissible torque is 20N · m/200kgfcm.
* RPM is based on motor's synchronous rpm (50HZ:1500rpm, 60HZ:1800rpm) and calculated by dividing gear ratio. Actual rpm is 2~20% less than indicating rpm according to load size.

GEARHEADS

RATED TORQUE OF GEARHEAD

● Single-phase 100V/115V

unit = above : N · m / below : kgfcm

Model / Motor/Gearhead	Ratio / Speed(rpm)	3	3.6	5	6	7.5	9	10	12.5	15	18	20	25	30	36	40	50	60	75	90	100	120	150	180	200
K9I□90F□-SU K9P□BU, BUF	1200	1.70 17.0	2.04 20.4	2.84 28.4	3.40 34.0	4.25 42.5	5.10 51.0	5.67 56.7	6.38 63.8	7.65 76.5	9.19 91.9	10.21 102.1	11.48 114.8	13.78 137.8	16.53 165.3	18.37 183.7	22.96 229.6	27.56 275.6	30 300	30 300	30 300	30 300	30 300	30 300	30 300
	90	0.56 5.6	0.67 6.7	0.93 9.3	1.12 11.2	1.40 14.0	1.68 16.8	1.86 18.6	2.10 21.0	2.52 25.2	3.02 30.2	3.35 33.5	3.77 37.7	4.53 45.3	5.43 54.3	6.04 60.4	7.55 75.5	9.05 90.5	10.19 101.9	12.22 122.2	13.58 135.8	16.30 163.0	20.37 203.7	24.45 244.5	27.16 271.6

● Single-phase 200V/240V

unit = above : N · m / below : kgfcm

Model / Motor/Gearhead	Ratio / Speed(rpm)		3	3.6	5	6	7.5	9	10	12.5	15	18	20	25	30	36	40	50	60	75	90	100	120	150	180	200
K9I□90F□-SU K9P□BU, BUF	1200		1.77 17.7	2.13 21.3	2.96 29.6	3.55 35.5	4.43 44.3	5.32 53.2	5.91 59.1	6.65 66.5	7.98 79.8	9.58 95.8	10.64 106.4	11.97 119.7	14.37 143.7	17.24 172.4	19.16 191.6	23.95 239.5	28.74 287.4	30 300	30 300	30 300	30 300	30 300	30 300	30 300
	90	200V/220V/230V/240V/50Hz	0.56 5.6	0.67 6.7	0.93 9.3	1.12 11.2	1.40 14.0	1.68 16.8	1.86 18.6	2.10 21.0	2.52 25.2	3.02 30.2	3.35 33.5	3.77 37.7	4.53 45.3	5.43 54.3	6.04 60.4	7.55 75.5	9.05 90.5	10.19 101.9	12.22 122.2	13.58 135.8	16.30 163.0	20.37 203.7	24.45 244.5	27.16 271.6
		200V/220V/230V/60Hz	0.63 6.3	0.76 7.6	1.05 10.5	1.26 12.6	1.58 15.8	1.90 19.0	2.11 21.1	2.37 23.7	2.84 28.4	3.41 34.1	3.79 37.9	4.26 42.6	5.12 51.2	6.14 61.4	6.82 68.2	8.53 85.3	10.24 102.4	11.51 115.1	13.82 138.2	15.35 153.5	18.42 184.2	23.03 230.3	27.63 276.3	30 300

* Gearhead and decimal gearhead are sold separately.
* The code in □ of gearhead model is for gear ratio.
* ▬ color indicates that the output shaft of the geared motor rotates in the same direction as the output shaft of the motor. Others indicate rotation in the opposite direction.
* If you are to have less ratio than the ratio in the table, you can install the decimal gearhead, which has one tenth of the ratio, between the gearhead and the motor. In this case, the permissible torque is 30N · m/300kgfcm.
* RPM is based on motor's synchronous rpm (50HZ:1500rpm, 60HZ:1800rpm) and calculated by dividing gear ratio. Actual rpm is 2~20% less than indicating rpm according to load size.

CONNECTION DIAGRAMS

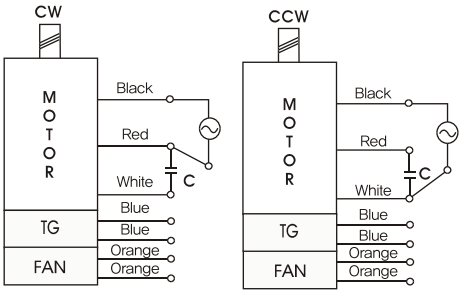

※The direction of motor rotation is as viewed from the front shaft end of the motor

GEARHEADS

DIMENSIONS

K9P□B

K9P□BF, BUF

K9P□BU

DECIMAL GEARHEAD

K9P10BX

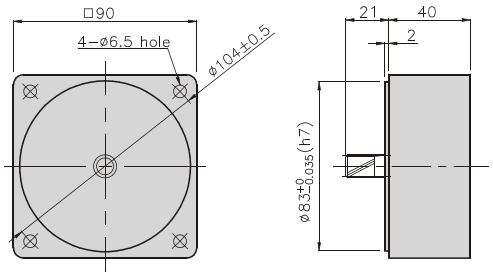

GEARHEAD

K9P□B

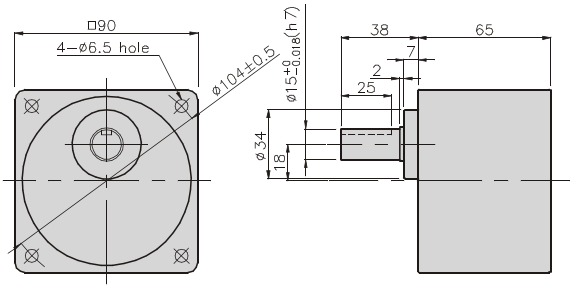

GEARHEAD

K9P□BF

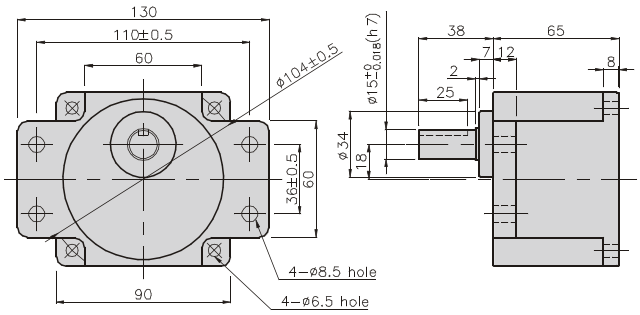

GEARHEAD

K9P□BU

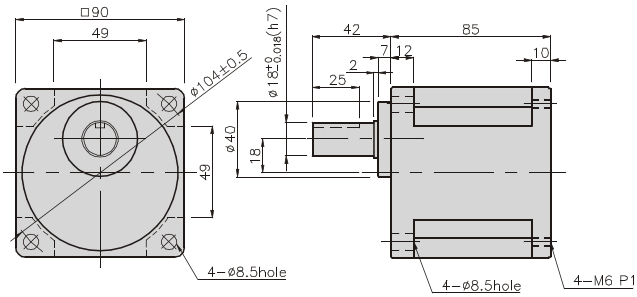

GEARHEAD

K9P□BUF

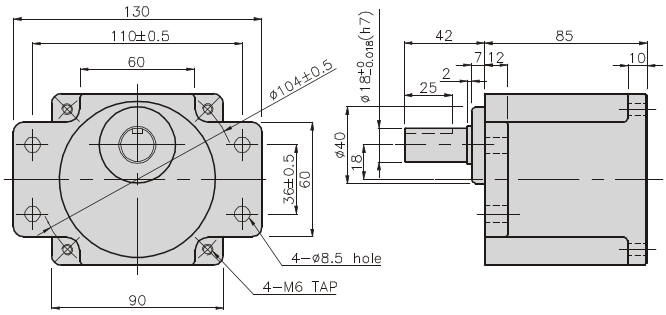

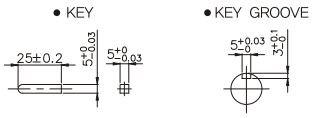

GEARHEADS

DIMENSIONS

K9IP90F□-SU + K9P□B

K9IP90F□-SU + K9P□BF, BUF

K9IP90F□-SU + K9P□BU

K9IP90F□-SU + K9P□B

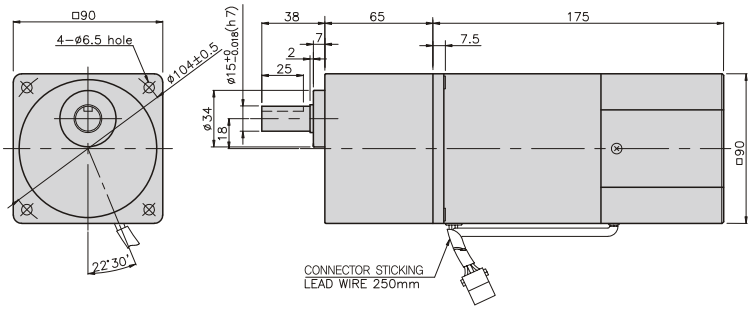

WEIGHT

PART	WEIGHT(kg)
MOTOR	3.06
DECIMAL GEAR HEAD	0.62

DIMENSION TABLE

PART No.	L	Application Model	Mounting BOLT
01	65	K9P3~200B	M6 P1.0 X 95
02	40	K9P10BX	M6 P1.0 X 140

K9IP90F□-SU + K9P□BF

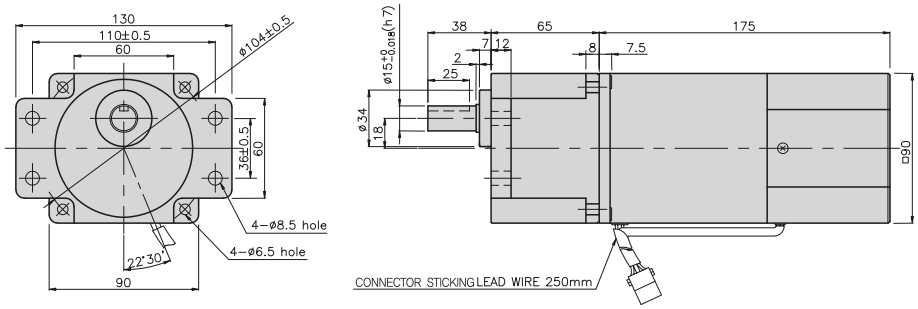

WEIGHT

PART	WEIGHT(kg)
K9P3~10B	1.22
K9P12.5~20B	1.32
K9P25~60B	1.42
K9P75~200B	1.45

DIMENSION TABLE

PART No.	L	Application Model	Mounting BOLT
01	65	K9P3~200BF	M6 P1.0 X 25
02	40	K9P10BX	M6 P1.0 X 65

K9IP90F□-SU + K9P□BU

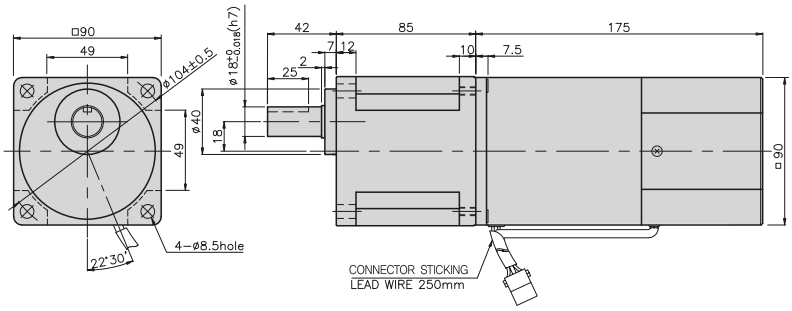

WEIGHT

PART	WEIGHT(kg)
K9P3~10BF	1.22
K9P12.5~20BF	1.30
K9P25~60BF	1.42
K9P75~200BF	1.44

DIMENSION TABLE

PART No.	L	Application Model	Mounting BOLT
01	85	K9P3~200BU	M6 P1.0 X 20
02	40	K9P10BX	M6 P1.0 X 60

K9IP90F□-SU + K9P□BUF

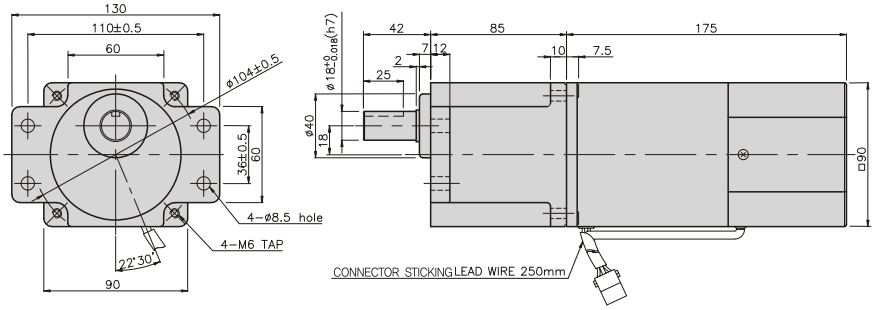

WEIGHT

PART	WEIGHT(kg)
K9P3~10BU	1.44
K9P12.5~20BU	1.55
K9P25~60BU	1.69
K9P75~200BU	1.74

DIMENSION TABLE

PART No.	L	Application Model	Mounting BOLT
01	85	K9P3~200BUF	M6 P1.0 X 20
02	40	K9P10BX	M6 P1.0 X 65

WEIGHT

PART	WEIGHT(kg)
K9P3~10BUF	1.50
K9P12.5~20BUF	1.62
K9P25~60BUF	1.76
K9P75~200BUF	1.82

SPEED CONTROL MOTOR - SU SERIES

120W □90mm

K9□S120F□–SU

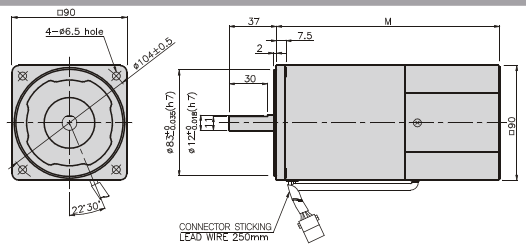

SPECIFICATIONS

120W continuous rating, four poles

Model		Voltage (V)	Frequency (Hz)	Speed Range (rpm)	Permissible Torque 1200rpm (N*m/Kgf*Cm)	Permissible Torque 90rpm (N*m/Kgf*Cm)	Start T. (N*m/Kgf*Cm)	Current (A)	Condenser (μF)
K9I□120FJ–SU	single–phase	100	50	90 ~ 1400	0.83/8.3	0.3/3	0.4/4	3.4	35
			60	90 ~ 1700			0.45/4.5		
K9I□120FU–SU		110	60	90 ~ 1700	0.83/8.3	0.3/3	0.45/4.5	3.2	30
		115							
K9I□120FL–SU		200	50	90 ~ 1400	0.83/8.3	0.28/2.8	0.4/4	1.4	8.5
			60	90 ~ 1700	0.8/8	0.3/3		1.5	8
K9I□120FC–SU		220	50	90 ~ 1400	0.83/8.3	0.28/2.8	0.4/4	1.2	6
		230		90 ~ 1700					
		220	60	90 ~ 1400	0.8/8	0.3/3	0.45/4.5	1.4	7
		230		90 ~ 1700					
K9I□120FD–SU		240	50	90 ~ 1400	0.83/8.3	0.28/2.8	0.4/4	1.3	6

* □ : SHAFT SHAPE (S : STRAIGHT, G : PINION)

RATED TORQUE OF GEARHEAD

● Single–phase 100V/115V

unit = above : N · m / below : kgfcm

Model / Motor/Gearhead	Ratio / Speed(rpm)	3	3.6	5	6	7.5	9	10	12.5	15	18	20	25	30	36	40	50	60	75	90	100	120	150	180	200
K9I□120F□–SU K9P□B, BF	1200	2.02 20.2	2.42 24.2	3.36 33.6	4.03 40.3	5.04 50.4	6.05 60.5	6.72 67.2	7.56 75.6	9.08 90.8	10.89 108.9	12.10 121.0	13.61 136.1	16.34 163.4	19.60 196.0	20 200	20 200	20 200	20 200	20 200	20 200	20 200	20 200	20 200	20 200
	90	0.73 7.3	0.87 8.7	1.22 12.2	1.46 14.6	1.82 18.2	2.19 21.9	2.43 24.3	2.73 27.3	3.28 32.8	3.94 39.4	4.37 43.7	4.92 49.2	5.90 59.0	7.09 70.9	7.87 78.7	9.84 98.4	11.81 118.1	13.29 132.9	15.94 159.4	17.71 177.1	20 200	20 200	20 200	20 200

● Single–phase 200V/240V

unit = above : N · m / below : kgfcm

Model / Motor/Gearhead	Ratio / Speed(rpm)		3	3.6	5	6	7.5	9	10	12.5	15	18	20	25	30	36	40	50	60	75	90	100	120	150	180	200
K9I□120F□–SU K9P□B, BF	1200	200V/220V/230V 240V/50HZ	2.02 20.2	2.42 24.2	3.36 33.6	4.03 40.3	5.04 50.4	6.05 60.5	6.72 67.2	7.56 75.6	9.08 90.8	10.89 108.9	12.10 121.0	13.61 136.1	16.34 163.4	19.60 196.0	20 200	20 200	20 200	20 200	20 200	20 200	20 200	20 200	20 200	20 200
		200V/220V 230V/60HZ	1.94 19.4	2.33 23.3	3.24 32.4	3.89 38.9	4.86 48.6	5.83 58.3	6.48 64.8	7.29 72.9	8.75 87.5	10.50 105.0	11.66 116.6	13.12 131.2	15.75 157.5	18.90 189.0	20 200	20 200	20 200	20 200	20 200	20 200	20 200	20 200	20 200	20 200
	90	200V/220V/230V 240V/50HZ	0.68 6.8	0.82 8.2	1.13 11.3	1.36 13.6	1.70 17.0	2.04 20.4	2.27 22.7	2.55 25.5	3.06 30.6	3.67 36.7	4.08 40.8	4.59 45.9	5.51 55.1	6.61 66.1	7.35 73.5	9.19 91.9	11.02 110.2	12.40 124.0	14.88 148.8	16.53 165.3	19.84 198.4	20 200	20 200	20 200
		200V/220V 230V/50HZ	0.73 7.3	0.87 8.7	1.22 12.2	1.46 14.6	1.82 18.2	2.19 21.9	2.43 24.3	2.73 27.3	3.28 32.8	3.94 39.4	4.37 43.7	4.92 49.2	5.90 59.0	7.09 70.9	7.87 78.7	9.84 98.4	11.81 118.1	13.29 132.9	15.94 159.4	17.71 177.1	20 200	20 200	20 200	20 200

* Gearhead and decimal gearhead are sold separately.
* The code in □ of gearhead model is for gear ratio.
* ▬ color indicates that the output shaft of the geared motor rotates in the same direction as the output shaft of the motor. Others indicate rotation in the opposite direction.
* If you are to have less ratio than the ratio in the table, you can install the decimal gearhead, which has one tenth of the ratio, between the gearhead and the motor. In this case, the permissible torque is 20N · m/200kgfcm.
* RPM is based on motor's synchronous rpm (50HZ:1500rpm, 60HZ:1800rpm) and calculated by dividing gear ratio. Actual rpm is 2~20% less than indicating rpm according to load size.

GEARHEADS

RATED TORQUE OF GEARHEAD

● Single-phase 100V/115V

unit = above : N · m / below : kgfcm

Model / Motor/Gearhead	Ratio / Speed(rpm)	3	3.6	5	6	7.5	9	10	12.5	15	18	20	25	30	36	40	50	60	75	90	100	120	150	180	200
K9I□120F□-SU K9P□BU, BUF	1200	2.02 20.2	2.42 24.2	3.36 33.6	4.03 40.3	5.04 50.4	6.05 60.5	6.72 67.2	7.56 75.6	9.08 90.8	10.89 108.9	12.10 121.0	13.61 136.1	16.34 163.4	19.60 196.0	21.78 217.8	27.23 272.3	30 300	30 300	30 300	30 300	30 300	30 300	30 300	30 300
	90	0.73 7.3	0.87 8.7	1.22 12.2	1.46 14.6	1.82 18.2	2.19 21.9	2.43 24.3	2.73 27.3	3.28 32.8	3.94 39.4	4.37 43.7	4.92 49.2	5.90 59.0	7.09 70.9	7.87 78.7	9.84 98.4	11.81 118.1	13.29 132.9	15.94 159.4	17.71 177.1	21.26 212.6	26.57 265.7	30 300	30 300

● Single-phase 200V/240V

unit = above : N · m / below : kgfcm

Model / Motor/Gearhead	Ratio	Speed(rpm)	3	3.6	5	6	7.5	9	10	12.5	15	18	20	25	30	36	40	50	60	75	90	100	120	150	180	200
K9I□120F□-SU K9P□BU, BUF	1200	200V/220V/230V 240V/50HZ	2.02 20.2	2.42 24.2	3.36 33.6	4.03 40.3	5.04 50.4	6.05 60.5	6.72 67.2	7.56 75.6	9.08 90.8	10.89 108.9	12.10 121.0	13.61 136.1	16.34 163.4	19.60 196.0	21.78 217.8	27.23 272.3	30 300	30 300	30 300	30 300	30 300	30 300	30 300	30 300
		200V/220V 230V/60HZ	1.94 19.4	2.33 23.3	3.24 32.4	3.89 38.9	4.86 48.6	5.83 58.3	6.48 64.8	7.29 72.9	8.75 87.5	10.50 105.0	11.66 116.6	13.12 131.2	15.75 157.5	18.90 189.0	21.00 210.0	26.24 262.4	30 300	30 300	30 300	30 300	30 300	30 300	30 300	30 300
	90	200V/220V/230V 240V/50HZ	0.68 6.8	0.82 8.2	1.13 11.3	1.36 13.6	1.70 17.0	2.04 20.4	2.27 22.7	2.55 25.5	3.06 30.6	3.67 36.7	4.08 40.8	4.59 45.9	5.51 55.1	6.61 66.1	7.35 73.5	9.19 91.9	11.02 110.2	12.40 124.0	14.88 148.8	16.53 165.3	19.84 198.4	24.80 248.0	29.76 297.6	30 300
		200V/220V 230V/60HZ	0.73 7.3	0.87 8.7	1.22 12.2	1.46 14.6	1.82 18.2	2.19 21.9	2.43 24.3	2.73 27.3	3.28 32.8	3.94 39.4	4.37 43.7	4.92 49.2	5.90 59.0	7.09 70.9	7.87 78.7	9.84 98.4	11.81 118.1	13.29 132.9	15.94 159.4	17.71 177.1	21.26 212.6	26.57 265.7	30 300	30 300

* Gearhead and decimal gearhead are sold separately.
* The code in □ of gearhead model is for gear ratio.
* ▬ color indicates that the output shaft of the geared motor rotates in the same direction as the output shaft of the motor. Others indicate rotation in the opposite direction.
* If you are to have less ratio than the ratio in the table, you can install the decimal gearhead, which has one tenth of the ratio, between the gearhead and the motor. In this case, the permissible torque is 30N · m/300kgfcm.
* RPM is based on motor's synchronous rpm (50HZ:1500rpm, 60HZ:1800rpm) and calculated by dividing gear ratio. Actual rpm is 2~20% less than indicating rpm according to load size.

CONNECTION DIAGRAMS

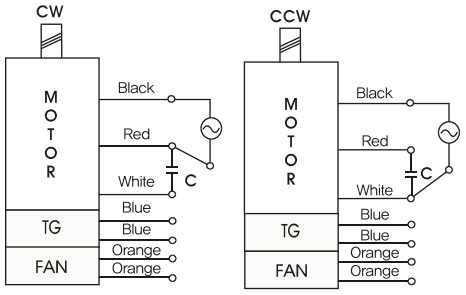

DIMENSION TABLE

PART No.	M	Application Model
01	195	50Hz
02	175	60Hz

※The direction of motor rotation is as viewed from the front shaft end of the motor

GEARHEADS

DIMENSIONS

K9P□B

K9P□BF, BUF

K9P□BU

DECIMAL GEARHEAD

K9P10BX

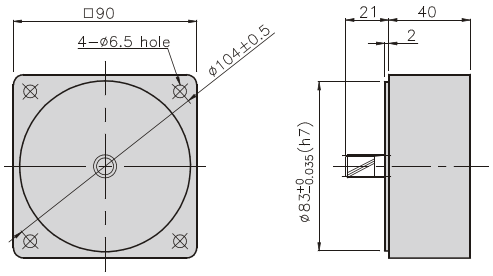

GEARHEAD

K9P□B

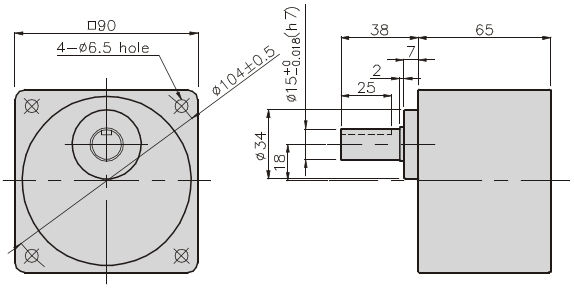

GEARHEAD

K9P□BF

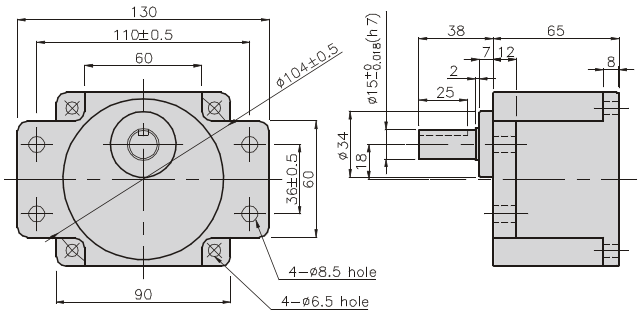

GEARHEAD

K9P□BU

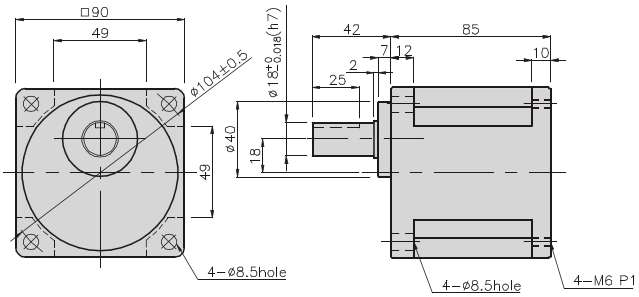

GEARHEAD

K9P□BUF

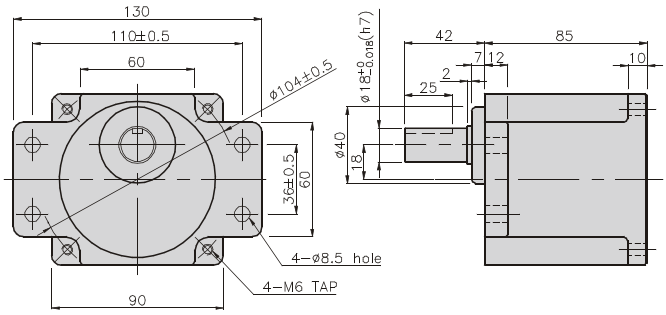

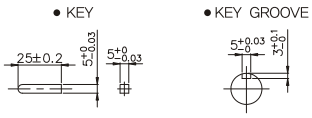

GEARHEADS

DIMENSIONS

K9IP120F□-SU + K9P□B

K9IP120F□-SU + K9P□BF, BUF

K9IP120F□-SU + K9P□BU

K9IP120F□-SU + K9P□B

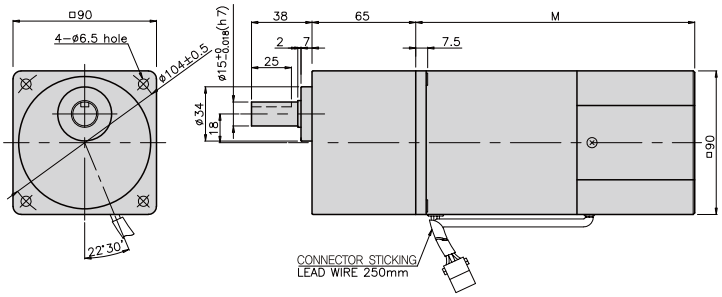

WEIGHT

PART	WEIGHT(kg)
MOTOR	3.54
DECIMAL GEAR HEAD	0.62

DIMENSION TABLE

PART No.	M	Application Model
01	155	50Hz
02	135	60Hz

DIMENSION TABLE

PART No.	L	Application Model	Mounting BOLT
01	65	K9P3~200B	M6 P1.0 X 95
02	40	K9P10BX	M6 P1.0 X 140

K9IP120F□-SU + K9P□BF

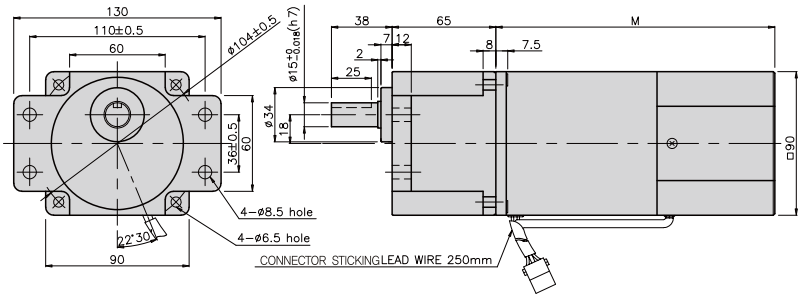

WEIGHT

PART	WEIGHT(kg)
K9P3~10B	1.22
K9P12.5~20B	1.32
K9P25~60B	1.42
K9P75~200B	1.45

DIMENSION TABLE

PART No.	L	Application Model	Mounting BOLT
01	65	K9P3~200BF	M6 P1.0 X 25
02	40	K9P10BX	M6 P1.0 X 65

K9IP120F□-SU + K9P□BU

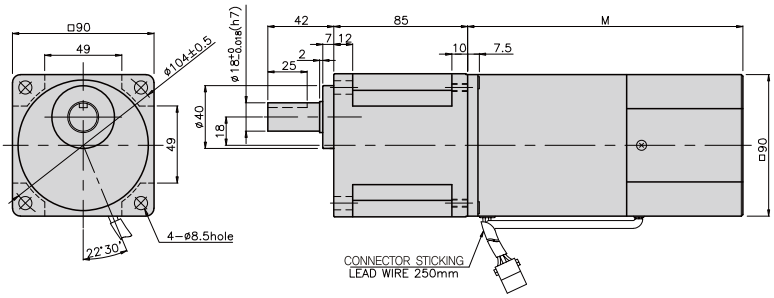

WEIGHT

PART	WEIGHT(kg)
K9P3~10BF	1.22
K9P12.5~20BF	1.30
K9P25~60BF	1.42
K9P75~200BF	1.44

DIMENSION TABLE

PART No.	L	Application Model	Mounting BOLT
01	85	K9P3~200BU	M6 P1.0 X 20
02	40	K9P10BX	M6 P1.0 X 60

K9IP120F□-SU + K9P□BUF

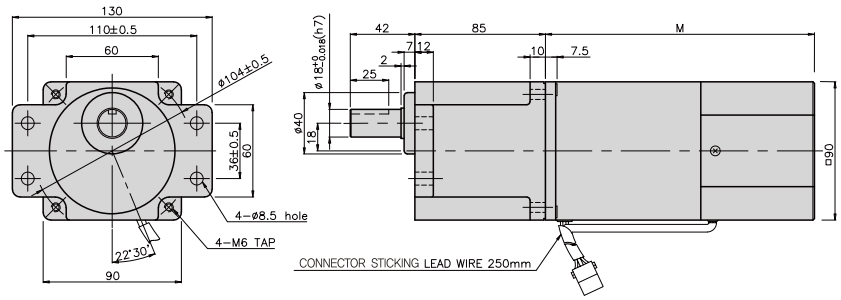

WEIGHT

PART	WEIGHT(kg)
K9P3~10BU	1.44
K9P12.5~20BU	1.55
K9P25~60BU	1.69
K9P75~200BU	1.74

DIMENSION TABLE

PART No.	L	Application Model	Mounting BOLT
01	85	K9P3~200BUF	M6 P1.0 X 20
02	40	K9P10BX	M6 P1.0 X 65

WEIGHT

PART	WEIGHT(kg)
K9P3~10BUF	1.50
K9P12.5~20BUF	1.62
K9P25~60BUF	1.76
K9P75~200BUF	1.82

SPEED CONTROL MOTOR - SU SERIES

180W □90mm

K9□180F□–SU

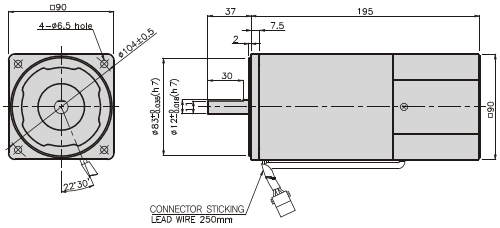

SPECIFICATIONS

180W continuous rating, four poles

Model		Voltage (V)	Frequency (Hz)	Speed Range (rpm)	Permissible Torque 1200rpm (N*m/Kgf*Cm)	Permissible Torque 90rpm (N*m/Kgf*Cm)	Start T. (N*m/Kgf*Cm)	Current (A)	Condenser (μF)
K9I□180FJ–SU	single–phase	100	50	90 ~ 1400	0.9/9	0.35/3.5	0.6/6	5.2	50
			60	90 ~ 1700			0.65/6.5	5.5	
K9I□180FU–SU		110	60	90 ~ 1700	0.9/9	0.35/3.5	0.52/5.2	4.8	35
		115					0.55/5.5	5	
K9I□180FL–SU		200	50	90 ~ 1400	0.9/9	0.3/3	0.5/5	2.2	12
			60	90 ~ 1700			0.42/4.2		
K9I□180FC–SU		220	50	90 ~ 1400	0.9/9	0.3/3	0.45/4.5	2.2	8
			60	90 ~ 1700			0.42/4.2	2	
		230	50	90 ~ 1400	1/10	0.33/3.3	0.53/5.3	2.4	
			60	90 ~ 1700			0.5/5	2.2	
K9I□180FD–SU		240	50	90 ~ 1400	1/10	0.33/3.3	0.6/6	2	8

* □ : SHAFT SHAPE (S : STRAIGHT, G : PINION)

RATED TORQUE OF GEARHEAD

● Single–phase 100V/115V

unit = above : N · m / below : kgfcm

Model / Motor/Gearhead	Ratio / Speed(rpm)	3	3.6	5	6	7.5	9	10	12.5	15	18	20	25	30	36	40	50	60	75	90	100	120	150	180	200
K9I□180F□–SU K9P□BU, BUF	1200	2.19 21.9	2.62 26.2	3.65 36.5	43.7 43.7	5.47 54.7	6.56 65.6	7.29 72.9	8.20 82.0	9.84 98.4	11.81 118.1	13.12 131.2	14.76 147.6	17.71 177.1	21.26 212.6	23.62 236.2	29.52 295.2	30 300	30 300	30 300	30 300	30 300	30 300	30 300	30 300
	90	0.85 8.5	1.02 10.2	1.42 14.2	1.70 17.0	2.13 21.3	2.55 25.5	2.84 28.4	3.19 31.9	3.83 38.3	4.59 45.9	5.10 51.0	5.74 57.4	6.89 68.9	8.27 82.7	9.19 91.9	11.48 114.8	13.78 137.8	15.50 155.0	18.60 186.0	20.67 206.7	24.80 248.0	30 300	30 300	30 300

● Single–phase 200V/240V

unit = above : N · m / below : kgfcm

Model / Motor/Gearhead	Ratio / Speed(rpm)		3	3.6	5	6	7.5	9	10	12.5	15	18	20	25	30	36	40	50	60	75	90	100	120	150	180	200
K9I□180F□–SU K9P□BU, BUF	1200	200V/220V 50Hz/60Hz	2.19 21.9	2.62 26.2	3.65 36.5	43.7 43.7	5.47 54.7	6.56 65.6	7.29 72.9	8.20 82.0	9.84 98.4	11.81 118.1	13.12 131.2	14.76 147.6	17.71 177.1	21.26 212.6	23.62 236.2	29.52 295.2	30 300	30 300	30 300	30 300	30 300	30 300	30 300	30 300
		230V/50Hz/60Hz 240/50Hz	2.43 24.3	2.92 29.2	4.05 40.5	4.86 48.6	6.08 60.8	7.29 72.9	8.10 81.0	3.19 31.9	10.94 109.4	13.12 131.2	14.58 145.8	16.40 164.0	19.68 197	23.62 236	26.24 262	30 300	30 300	30 300	30 300	30 300	30 300	30 300	30 300	30 300
	90	200V/220V 50Hz/60Hz	0.73 7.3	0.87 8.7	1.22 12.2	1.46 14.6	1.82 18.2	2.19 21.9	2.43 24.3	2.73 27.3	3.28 32.8	3.94 39.4	4.37 43.7	4.92 49.2	5.90 59.0	7.09 70.9	7.87 78.7	9.84 98.4	11.81 118.1	13.29 132.9	15.94 159.4	17.71 177.1	21.26 212.6	26.57 265.7	30 300	30 300
		230V/50Hz/60Hz 240/50Hz	0.80 8.0	0.96 9.6	1.34 13.4	1.60 16.0	2.00 20.0	2.41 24.1	2.41 24.1	3.34 33.4	4.01 40.1	4.81 48.1	5.35 53.5	5.41 54.1	6.50 65.0	7.79 77.9	8.66 86.6	10.83 108.3	12.99 129.2	14.61 146.1	17.54 175.4	19.49 194.9	23.38 233.8	29.23 292.3	30 300	30 300

* Gearhead and decimal gearhead are sold separately.
* The code in □ of gearhead model is for gear ratio.
* ▬ color indicates that the output shaft of the geared motor rotates in the same direction as the output shaft of the motor. Others indicate rotation in the opposite direction.
* If you are to have less ratio than the ratio in the table, you can install the decimal gearhead, which has one tenth of the ratio, between the gearhead and the motor. In this case, the permissible torque is 30N · m/300kgfcm.
* RPM is based on motor's synchronous rpm (50HZ:1500rpm, 60HZ:1800rpm) and calculated by dividing gear ratio. Actual rpm is 2~20% less than indicating rpm according to load size.

GEARHEADS

CONNECTION DIAGRAMS

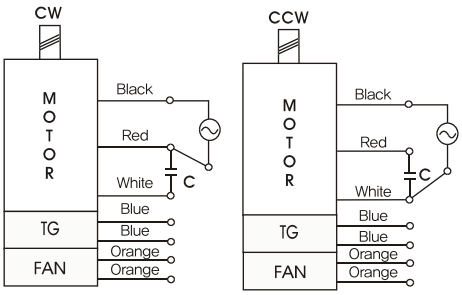

※The direction of motor rotation is as viewed from the front shaft end of the motor

DIMENSIONS

K9P□BU

K9P□BUF

DECIMAL GEARHEAD

K9P10BX

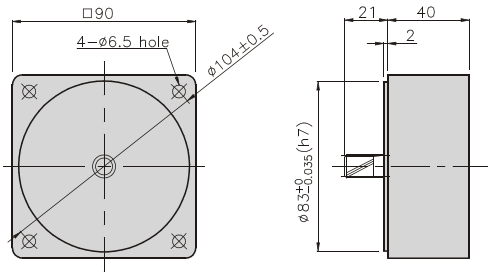

GEARHEAD

K9P□BU

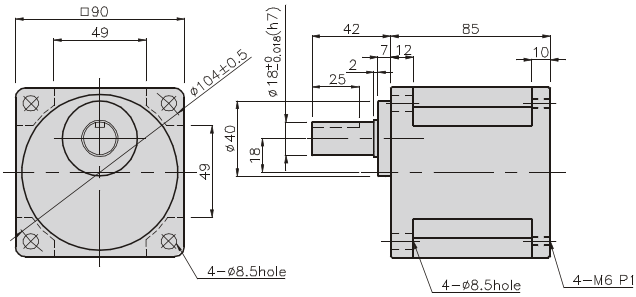

GEARHEAD

K9P□BUF

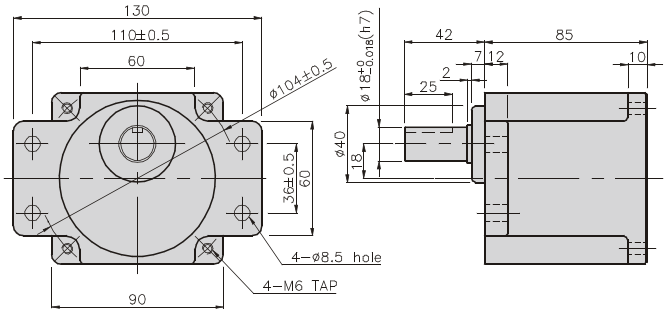

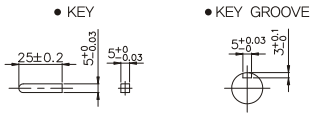

GEARHEADS

DIMENSIONS

K9IP180F□-SU + K9P□BU

K9IP180F□-SU + K9P□BUF

WEIGHT

PART	WEIGHT(kg)
MOTOR	4.24
DECIMAL GEAR HEAD	0.62

DIMENSION TABLE

PART No.	L	Application Model	Mounting BOLT
01	85	K9P3~200B	M6 P1.0 X 20
02	40	K9P10BX	M6 P1.0 X 60

WEIGHT

PART	WEIGHT(kg)
K9P3~10BU	1.44
K9P12.5~20BU	1.55
K9P25~60BU	1.69
K9P75~200BU	1.74

K9IP180F□-SU + K9P□BU

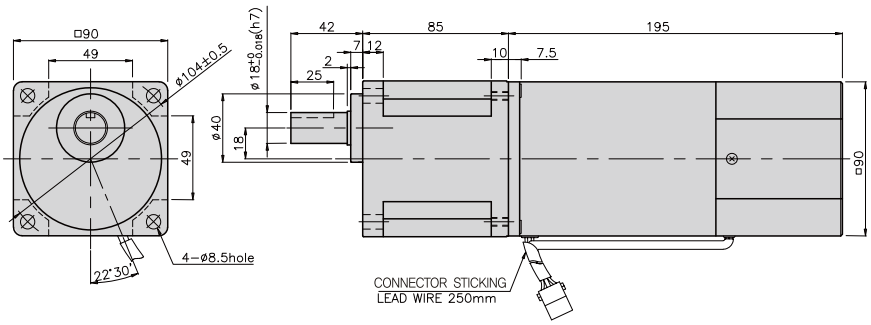

DIMENSION TABLE

PART No.	L	Application Model	Mounting BOLT
01	85	K9P3~200BUF	M6 P1.0 X 20
02	40	K9P10BX	M6 P1.0 X 60

WEIGHT

PART	WEIGHT(kg)
K9P3~10BUF	1.50
K9P12.5~20BUF	1.62
K9P25~60BUF	1.76
K9P75~200BUF	1.82
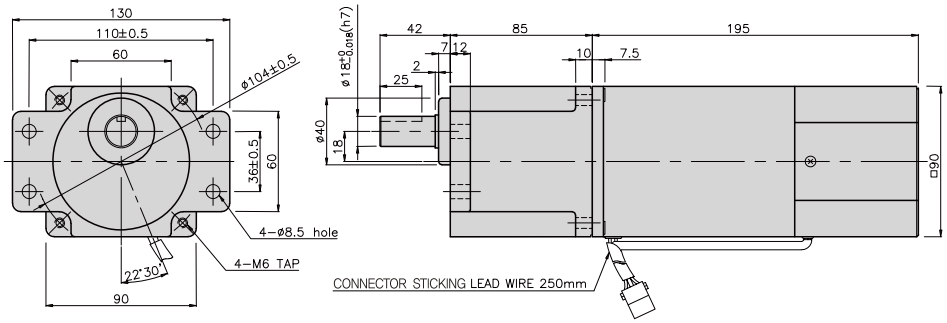
K9IP180F□-SU + K9P□BUF