REVERSIBLE MOTOR

6W □60mm

LEAD WIRE TYPE
TERMINAL BOX TYPE

K6RS6N□

K6RS6N□–T

SPECIFICATIONS

6W continuous rating, four poles

Model		Voltage (V)	Frequency (Hz)	Current (A)	Start T. (N*m/ Kgf*Cm)	Rated T. (N*m/ Kgf*Cm)	Speed (rpm)	Condenser (μF)
K6R□6NJ(–T)	single–phase	100	50	0.25	0.035/0.35	0.049/0.49	1200	3
			60	0.23		0.04/0.4	1500	
K6R□6NU(–T)		110	60	0.2	0.045/0.45	0.04/0.4	1500	2.5
		115		0.2	0.05/0.5			
K6R□6NL(–T)		200	50	0.12	0.055/0.55	0.049/0.49	1200	1
			60	0.13		0.04/0.4	1500	
K6R□6NC(–T)		220	50	0.12	0.045/0.45	0.047/0.47	1250	0.8
			60	0.12		0.04/0.4	1500	
		230	50	0.15	0.055/0.55	0.047/0.47	1250	
			60	0.13	0.06/0.6	0.04/0.4	1500	
K6R□6ND(–T)		240	50	0.12	0.048/0.48	0.047/0.47	1250	0.6

RATED TORQUE OF GEARHEAD

● 50Hz

unit = above : N·m / below : kgfcm

Model	Speed(rpm)	500	416	300	250	200	166	150	120	100	83	75	60	50	41	37	30	25	20	16	15	12.5	10	8.3	7.5	6
Motor/ Gearhead	Ratio	3	3.6	5	6	7.5	9	10	12.5	15	18	20	25	30	36	40	50	60	75	90	100	120	150	180	200	250
K6R□6N□(–T)		0.11	0.14	0.19	0.23	0.29	0.34	0.38	0.48	0.57	0.69	0.69	0.86	1.03	1.23	1.37	1.54	1.85	2.31	2.78	3	3	3	3	3	3
K6G□B(C)		1.1	1.4	1.9	2.3	2.9	3.4	3.8	4.8	5.7	6.9	6.9	8.6	10.3	12.3	13.7	15.4	18.5	21.3	27.8	30	30	30	30	30	30

● 60Hz

unit = above : N·m / below : kgfcm

Model	Speed(rpm)	600	500	360	300	240	200	180	144	120	100	90	72	60	50	45	36	30	24	20	18	15	12	10	9	7.2
Motor/ Gearhead	Ratio	3	3.6	5	6	7.5	9	10	12.5	15	18	20	25	30	36	40	50	60	75	90	100	120	150	180	200	250
K6R□6N□(–T)		0.10	0.12	0.16	0.19	0.24	0.29	0.32	0.41	0.49	0.58	0.58	0.73	0.87	1.05	1.17	1.31	1.57	1.97	2.36	2.62	3	3	3	3	3
K6G□B(C)		1.0	1.2	1.6	1.9	2.4	2.9	3.2	4.1	4.9	5.8	5.8	7.3	8.7	10.5	11.7	13.1	15.7	19.7	23.6	26.2	30	30	30	30	30

* Gearhead and decimal gearhead are sold separately.
* The code in □ of gearhead model is for gear ratio.
* ▬ color indicates that the output shaft of the geared motor rotates in the same direction as the output shaft of the motor. Others indicate rotation in the opposite direction.
* If you are to have less ratio than the ratio in the table, you can install the decimal gearhead, which has one tenth of the ratio, between the gearhead and the motor. In this case, the permissible torque is 3N·m/30kgfcm.
* RPM is based on motor's synchronous rpm (50HZ:1500rpm, 60HZ:1800rpm) and calculated by dividing gear ratio. Actual rpm is 2~20% less than indicating rpm according to load size.

GEARHEADS

DIMENSIONS

K6RS6N□

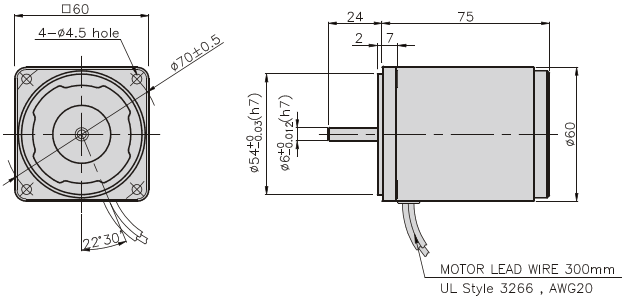

K6RS6N□−T

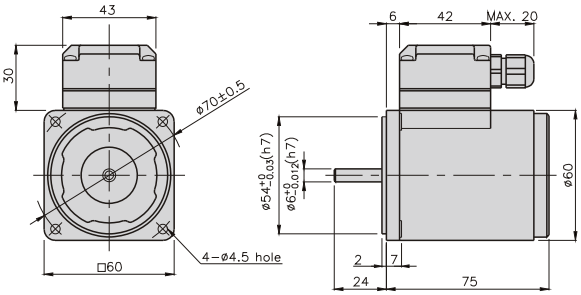

CONNECTION DIAGRAMS

K6RS6N□

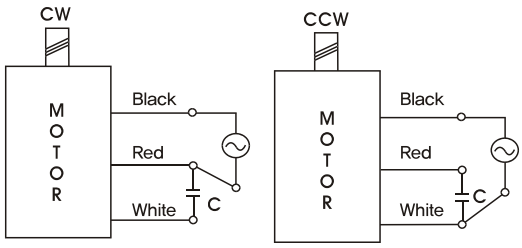

The direction of motor rotation is as viewed from the front shaft end of the motor

K6RS6N□−T

single phase motor

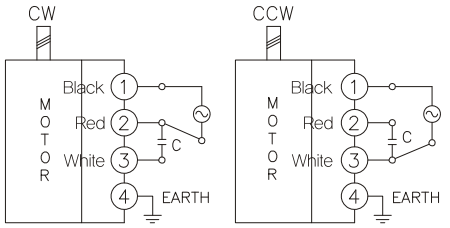

three phase motor

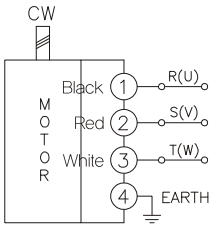

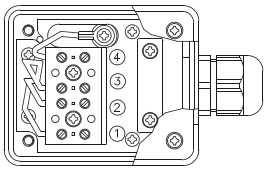

The direction of motor rotation is as viewed from the front shaft end of the motor

DIMENSIONS

K6G□B(C)

DECIMAL GEARHEAD

K6G10BX□

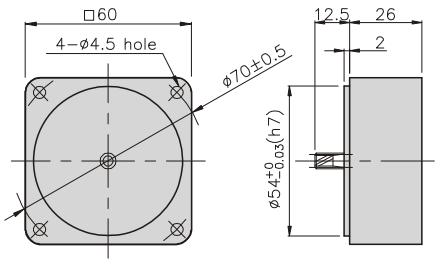

GEARHEAD

K6G□B(C)

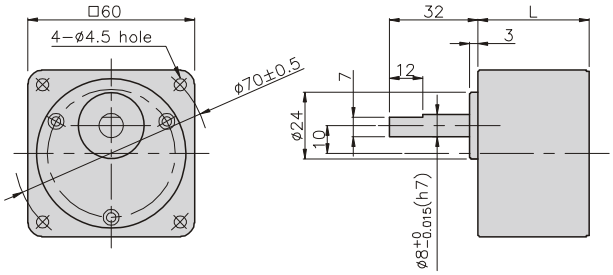

REVERSIBLE MOTORS

GEARHEADS

DIMENSIONS

K6RG6N□ + K6G□B(C)

K6RG6N□–T + K6G□B(C)

K6RG6N□ + K6G□B(C)

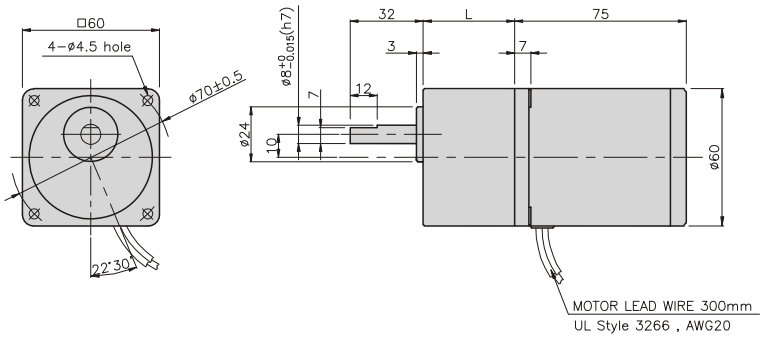

DIMENSION TABLE

PART No	L	Application Model	Mounting BOLT
01	30	K6G3~18B(C)	M4 P0.7 X 50
02	40	K6G20~250B(C)	M4 P0.7 X 60
03	26	K6G10BX	M4 P0.7 X 85

WEIGHT

PART		WEIGHT(kg)
MOTOR		0.72
DECIMAL GEAR HEAD		0.22
GEAR HEAD	K6G3~18B(C)	0.26
	K6G20~40B(C)	0.33
	K6G50~250B(C)	0.36

K6RG6N□–T + K6G□B(C)

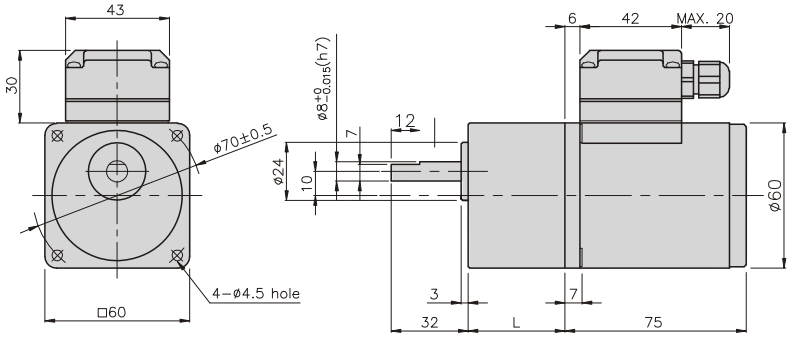

DIMENSION TABLE

PART No	L	Application Model	Mounting BOLT
01	30	K6G3~18B(C)	M4 P0.7 X 50
02	40	K6G20~250B(C)	M4 P0.7 X 60
03	26	K6G10BX	M4 P0.7 X 85

WEIGHT

PART		WEIGHT(kg)
MOTOR		0.76
DECIMAL GEAR HEAD		0.22
GEAR HEAD	K6G3~18B(C)	0.26
	K6G20~40B(C)	0.33
	K6G50~250B(C)	0.36

REVERSIBLE MOTOR

15W □70mm

LEAD WIRE TYPE
TERMINAL BOX TYPE

K7RS15N□

K7RS15N□–T

SPECIFICATIONS

15W continuous rating, four poles

Model		Voltage (V)	Frequency (Hz)	Current (A)	Start T. (N*m/ Kgf*Cm)	Rated T. (N*m/ Kgf*Cm)	Speed (rpm)	Condenser (μF)
K7R□15NJ(–T)	single–phase	100	50	0.46	0.115/1.15	0.12/1.2	1250	7
			60	0.48		0.1/1	1500	
K7R□15NU(–T)		110	60	0.47	0.12/1.2	0.1/1	1500	6
		115		0.49	0.125/1.25			
K7R□15NL(–T)		200	50	0.23	0.115/1.15	0.12/1.2	1250	2
			60	0.28		0.1/1	1500	
K7R□15NC(–T)		220	50	0.21	0.115/1.15	0.12/1.2	1250	1.5
			60	0.24		0.1/1	1500	
		230	50	0.25	0.125 1.25	0.12/1.2	1250	
			60	0.24	0.125 1.25	0.1/1	1500	
K7R□15ND(–T)		240	50	0.25	0.13 1.3	0.12/1.2	1250	1.5

* □ : SHAFT SHAPE (S : STRAIGHT, G : PINION)

RATED TORQUE OF GEARHEAD

● 50Hz

unit = above : N · m / below : kgfcm

Model	Speed(rpm)	500	416	300	250	200	166	150	120	100	83	75	60	50	41	37	30	25	20	16	15	12.5	10	8.3	9
Motor/ Gearhead	Ratio	3	3.6	5	6	7.5	9	10	12.5	15	18	20	25	30	36	40	50	60	75	90	100	120	150	180	200
K7R□15N□(–T) K7G□B(C)		0.29	0.35	0.49	0.58	0.73	0.87	0.97	1.22	1.46	1.75	1.75	2.19	2.62	3.15	3.50	3.94	4.72	5	5	5	5	5	5	5
		2.9	3.5	4.9	5.8	7.3	8.7	9.7	12.2	14.6	17.5	17.5	21.9	26.2	31.5	35.0	39.4	47.2	50	50	50	50	50	50	50

● 60Hz

unit = above : N · m / below : kgfcm

Model	Speed(rpm)	600	500	360	300	240	200	180	144	120	100	90	72	60	50	45	36	30	24	20	18	15	12	10	9
Motor/ Gearhead	Ratio	3	3.6	5	6	7.5	9	10	12.5	15	18	20	25	30	36	40	50	60	75	90	100	120	150	180	200
K7R□15N□(–T) K7G□B(C)		0.24	0.29	0.41	0.49	0.61	0.73	0.81	1.01	1.22	1.46	1.46	1.82	2.19	2.26	2.92	3.28	3.94	4.92	5	5	5	5	5	5
		2.4	2.9	4.1	4.9	6.1	7.3	8.1	10.1	12.2	14.6	14.6	18.2	21.9	26.2	29.2	32.8	39.4	49.2	50	50	50	50	50	50

* Gearhead and decimal gearhead are sold separately.
* The code in □ of gearhead model is for gear ratio.
* ▬ color indicates that the output shaft of the geared motor rotates in the same direction as the output shaft of the motor. Others indicate rotation in the opposite direction.
* If you are to have less ratio than the ratio in the table, you can install the decimal gearhead, which has one tenth of the ratio, between the gearhead and the motor. In this case, the permissible torque is 5N · m/50kgfcm.
* RPM is based on motor's synchronous rpm (50HZ:1500rpm, 60HZ:1800rpm) and calculated by dividing gear ratio. Actual rpm is 2~20% less than indicating rpm according to load size.

GEARHEADS

DIMENSIONS

K7RS15N□

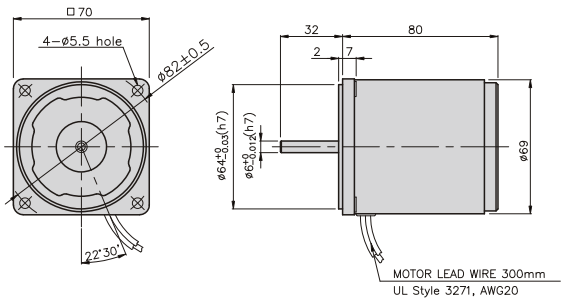

K7RS15N□−T

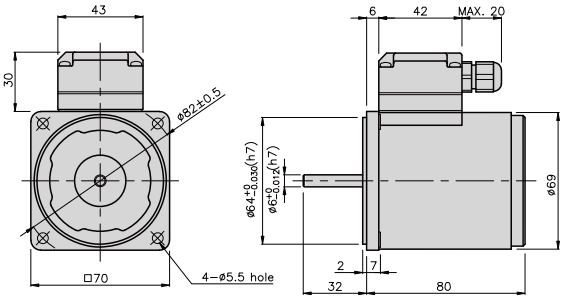

CONNECTION DIAGRAMS

K7RS15N□

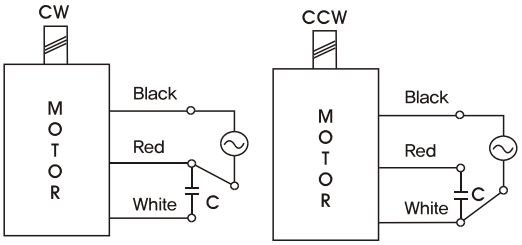

The direction of motor rotation is as viewed from the front shaft end of the motor

K7RS15N□−T

single phase motor

three phase motor

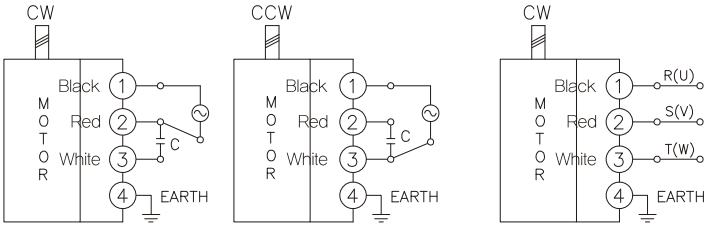

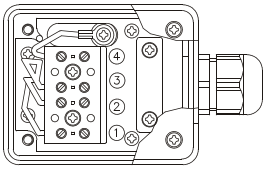

The direction of motor rotation is as viewed from the front shaft end of the motor

DIMENSIONS

K7G□B(C)

DECIMAL GEARHEAD

K7G10BX

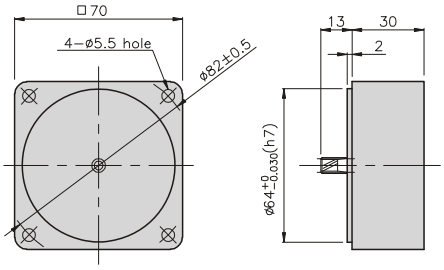

GEARHEAD

K7G□B(C)

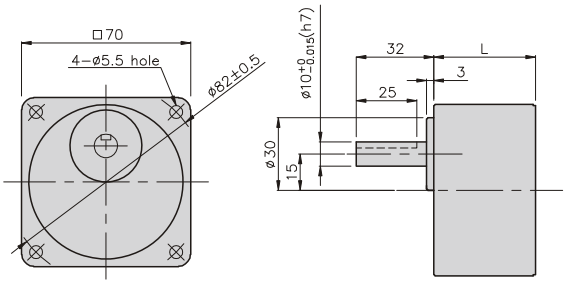

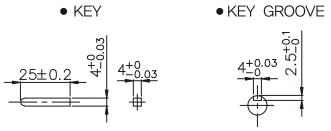

GEARHEADS

DIMENSIONS

K7RG15N□ + K7G□B(C)

K7RG15N□–T + K7G□B(C)

K7RG15N□ + K7G□B(C)

DIMENSION TABLE

PART No	L	Application Model	Mounting BOLT
01	32	K7G3~18B(C)	M5 P0.8 X 50
02	42	K7G20~200B(C)	M5 P0.8 X 65
03	30	K7G10BX	M5 P0.8 X 90

WEIGHT

PART		WEIGHT(kg)
MOTOR		1.07
DECIMAL GEAR HEAD		0.32
GEAR HEAD	K7G3~18B(C)	0.38
	K7G20~40B(C)	0.46
	K7G50~200B(C)	0.51

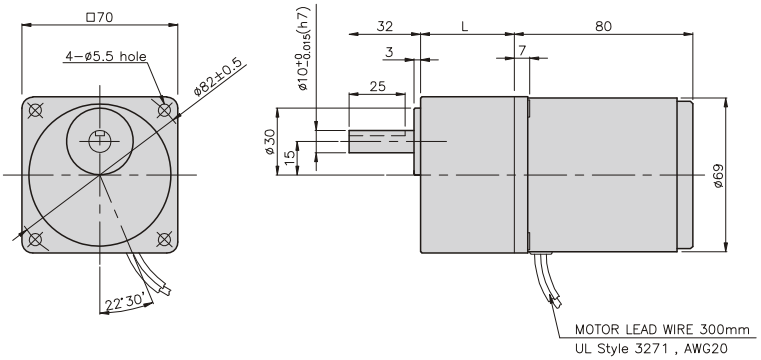

K7RG15N□–T + K7G□B(C)

DIMENSION TABLE

PART No	L	Application Model	Mounting BOLT
01	32	K7G3~18B(C)	M5 P0.8 X 50
02	42	K7G20~200B(C)	M5 P0.8 X 65
03	30	K7G10BX	M5 P0.8 X 90

WEIGHT

PART		WEIGHT(kg)
MOTOR		1.10
DECIMAL GEAR HEAD		0.32
GEAR HEAD	K7G3~18B(C)	0.38
	K7G20~40B(C)	0.46
	K7G50~200B(C)	0.51

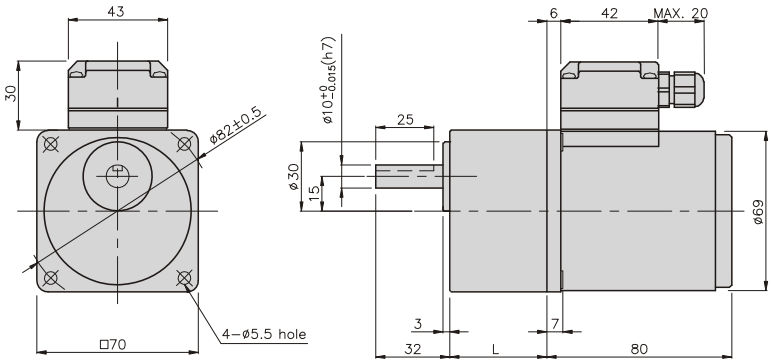

REVERSIBLE MOTOR

25W □80mm

LEAD WIRE TYPE
TERMINAL BOX TYPE

K8RS25N□

K8RS25N□–T, T5

SPECIFICATIONS

25W continuous rating, four poles

Model		Voltage (V)	Frequency (Hz)	Current (A)	Start T. (N*m/ Kgf*Cm)	Rated T. (N*m/ Kgf*Cm)	Speed (rpm)	Condenser (μF)
K8R□25NJ(–T, –T5)	single–phase	100	50	0.65	0.15/1.5	0.195/1.95	1250	10
			60	0.74		0.165/1.65	1500	
K8R□25NU(–T, –T5)		110	60	0.51	0.13/1.3	0.165/1.65	1500	6
		115		0.54				
K8R□25NL(–T, –T5)		200	50	0.33	0.16/1.6	0.195/1.95	1250	2.5
			60	0.37		0.16/1.6	1550	
K8R□25NC(–T, –T5)		220	50	0.29	0.15/1.5	0.195/1.95	1250	2
			60	0.34		0.165/1.65	1500	
		230	50	0.35	0.165/1.65	0.195/1.95	1250	
			60	0.34		0.165/1.65	1500	
K8R□25ND(–T, –T5)		240	50	0.32	0.15/1.5	0.19/1.9	1300	1.5

* □ : SHAFT SHAPE (S : STRAIGHT, G : PINION)

RATED TORQUE OF GEARHEAD

● 50Hz

unit = above : N · m / below : kgfcm

Model	Speed(rpm)	500	416	300	250	200	166	150	120	100	83	75	60	50	41	37	30	25	20	16	15	12.5	10	8.3	7.5	6
Motor/ Gearhead	Ratio	3	3.6	5	6	7.5	9	10	12.5	15	18	20	25	30	36	40	50	60	75	90	100	120	150	180	200	250
K8R□25N□(–T, –T5)		0.46	0.55	0.77	0.92	1.15	1.39	1.54	1.92	2.31	2.77	2.77	3.46	4.16	4.99	5.54	6.23	7.48	8	8	8	8	8	8	8	8
K8G□B(C)		4.6	5.5	7.7	9.2	11.5	13.9	15.4	19.2	23.1	27.7	27.7	34.6	41.6	49.9	55.4	62.3	74.8	80	80	80	80	80	80	80	80

● 60Hz

unit = above : N · m / below : kgfcm

Model	Speed(rpm)	600	500	360	300	240	200	180	144	120	100	90	72	60	50	45	36	30	24	20	18	15	12	10	9	7.2
Motor/ Gearhead	Ratio	3	3.6	5	6	7.5	9	10	12.5	15	18	20	25	30	36	40	50	60	75	90	100	120	150	180	200	250
K8R□25N□(–T, –T5)		0.39	0.47	0.65	0.78	0.97	1.17	1.30	1.62	1.94	2.33	2.33	2.92	3.50	4.20	4.67	5.25	6.30	7.87	8	8	8	8	8	8	8
K8G□B(C)		3.9	4.7	6.5	7.8	9.7	11.7	13.0	16.2	19.4	23.3	23.3	29.2	35.0	42.0	46.7	52.5	63.0	78.7	80	80	80	80	80	80	80

* Gearhead and decimal gearhead are sold separately.
* The code in □ of gearhead model is for gear ratio.
* ▬ color indicates that the output shaft of the geared motor rotates in the same direction as the output shaft of the motor. Others indicate rotation in the opposite direction.
* If you are to have less ratio than the ratio in the table, you can install the decimal gearhead, which has one tenth of the ratio, between the gearhead and the motor. In this case, the permissible torque is 8N · m/80kgfcm. But, if you install 1/25~1/40 gearhead, the permissible torque is 6N · m/60kgfcm.
* RPM is based on motor's synchronous rpm (50HZ:1500rpm, 60HZ:1800rpm) and calculated by dividing gear ratio. Actual rpm is 2~20% less than indicating rpm according to load size.

GEARHEADS

DIMENSIONS

K8RS25N□

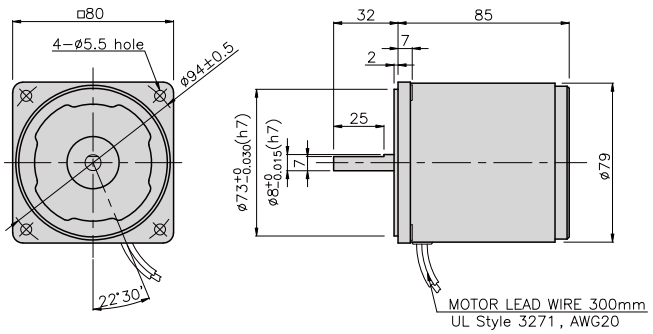

K8RS25N□−T

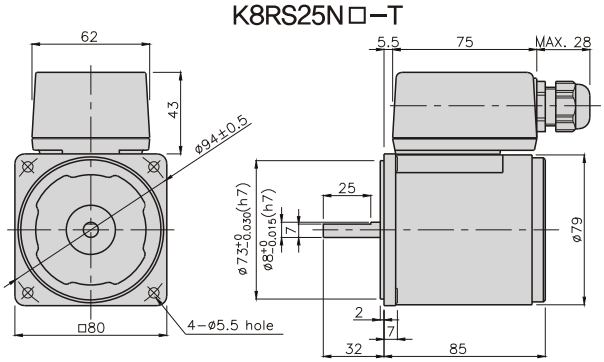

K8RS25N□−T5

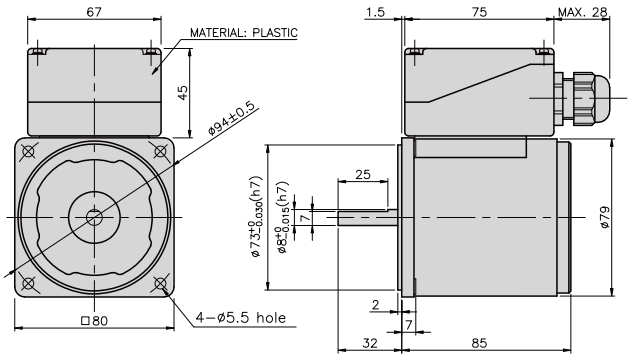

CONNECTION DIAGRAMS

K8RS25N□

single phase motor

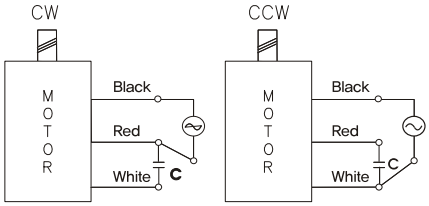

three phase motor

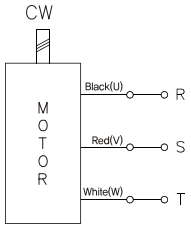

connecting two leadwires of U,V,W in turns

The direction of motor rotation is as viewed from the front shaft end of the motor

K8RS25N□−T

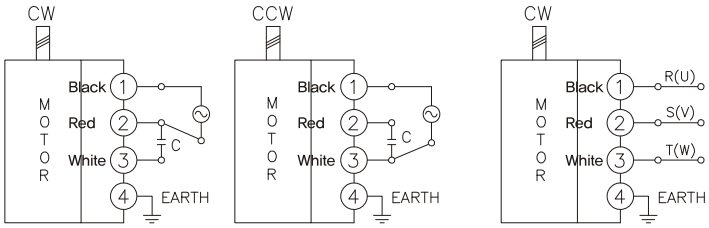

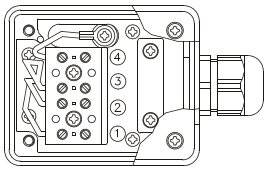

The direction of motor rotation is as viewed from the front shaft end of the motor

K8RS25N□−T5

single phase motor

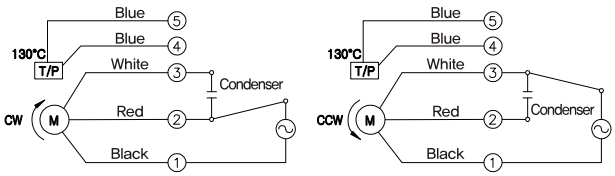

three phase motor

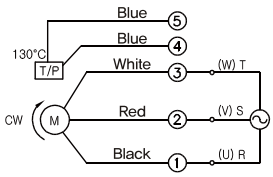

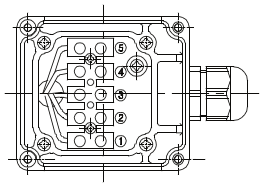

connecting two leadwires of U,V,W in turns

The direction of motor rotation is as viewed from the front shaft end of the motor

GEARHEADS

DIMENSIONS

K8G□B(C)

DECIMAL GEARHEAD

K8G10BX

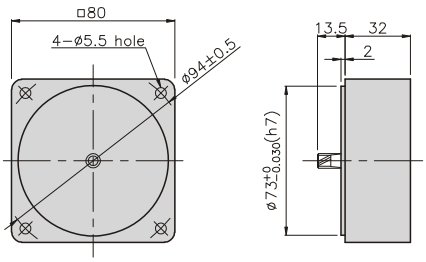

GEAR HEAD

K8G□B(C)

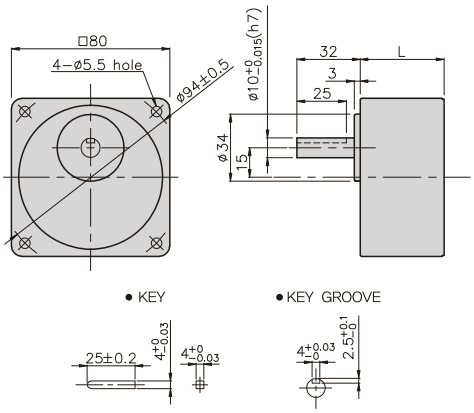

GEARHEADS

DIMENSIONS

K8RG25N□ + K8G□B(C)

K8RG25N□–T(–T5) + K8G□B(C)

K8RG25N□ + K8G□B(C)

DIMENSION TABLE

PART No	L	Application Model	Mounting BOLT
01	32	K8G3~18B(C)	M5 P0.8 X 50
02	42.5	K8G20~250B(C)	M5 P0.8 X 65
03	32	K8G10BX	M5 P0.8 X 95

WEIGHT

PART		WEIGHT(kg)
MOTOR		1.58
DECIMAL GEAR HEAD		0.46
GEAR HEAD	K8G3~18B(C)	0.51
	K8G20~40B(C)	0.64
	K8G50~250B(C)	0.70

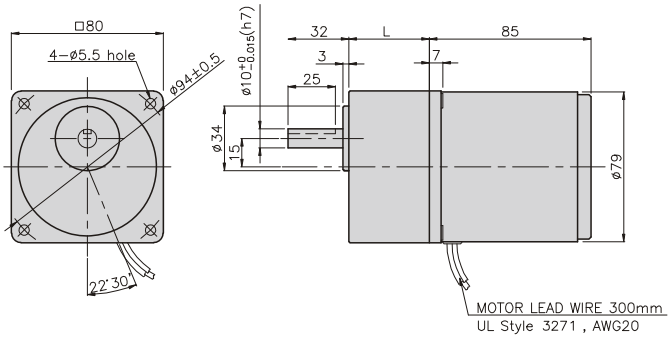

K8RG25N□–T + K8G□B(C)

DIMENSION TABLE

PART No	L	Application Model	Mounting BOLT
01	32	K8G3~18B(C)	M5 P0.8 X 50
02	42.5	K8G20~250B(C)	M5 P0.8 X 60
03	32	K8G10BX	M5 P0.8 X 95

WEIGHT

PART		WEIGHT(kg)
MOTOR		1.76
DECIMAL GEAR HEAD		0.46
GEAR HEAD	K8G3~18B(C)	0.51
	K8G20~40B(C)	0.64
	K8G50~250B(C)	0.70

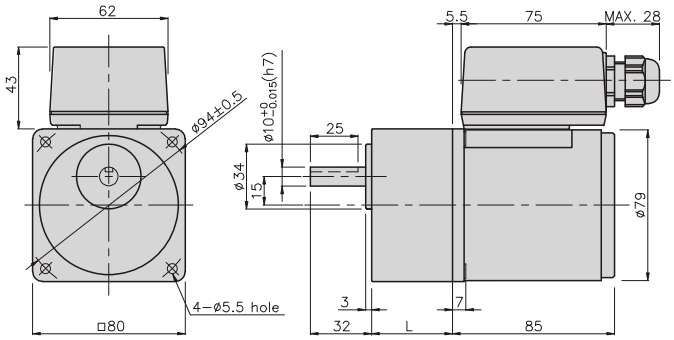

K8RG25N□–T5 + K8G□B(C)

DIMENSION TABLE

PART No	L	Application Model	Mounting BOLT
01	32	K8G3~18B(C)	M5 P0.8 X 50
02	42.5	K8G20~250B(C)	M5 P0.8 X 60
03	32	K8G10BX	M5 P0.8 X 95

WEIGHT

PART		WEIGHT(kg)
MOTOR		1.76
DECIMAL GEAR HEAD		0.46
GEAR HEAD	K8G3~18B(C)	0.51
	K8G20~40B(C)	0.64
	K8G50~250B(C)	0.70

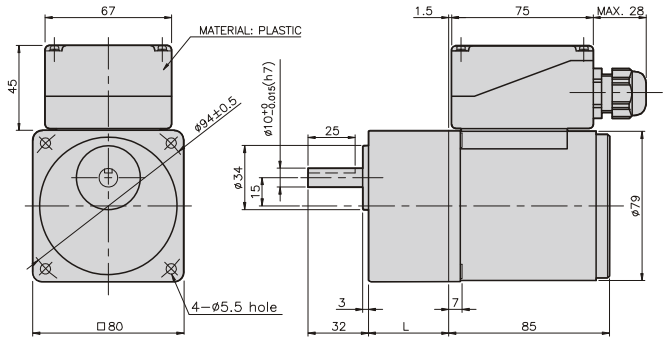

GGM GGM GEARED MOTOR

REVERSIBLE MOTOR

40W □90mm

LEAD WIRE TYPE
TERMINAL BOX TYPE

K9RS40N□

K9RS40N□–T, T5

SPECIFICATIONS

40W continuous rating, four poles

Model		Voltage (V)	Frequency (Hz)	Current (A)	Start T. (N*m/ Kgf*Cm)	Rated T. (N*m/ Kgf*Cm)	Speed (rpm)	Condenser (μF)
K9R□40NJ(–T, –T5)	single–phase	100	50	1	0.3/3	0.315/3.15	1250	16
			60	1.13	0.33/3.3	0.255/2.55	1550	
K9R□40NU(–T, –T5)		110	60	0.8	0.2/2	0.26/2.6	1500	10
		115		0.83	0.22/2.2			
K9R□40NL(–T, –T5)		200	50	0.45	0.3/3	0.315/3.15	1250	4
			60	0.57		0.26/2.6	1500	
K9R□40NC(–T, –T5)		220	50	0.46	0.3/3	0.315/3.15	1250	3.5
			60	0.55	0.32/3.2	0.26/2.6	1500	
		230	50	0.55	0.4/4	0.315/3.15	1250	
			60	0.58	0.36/3.6	0.26/2.6	1500	
K9R□40ND(–T, –T5)		240	50	0.41	0.34/3.4	0.3/3	1300	3

□ : SHAFT SHAPE (S : STRAIGHT, G : PINION)

RATED TORQUE OF GEARHEAD

● 50Hz

unit = above : N·m / below : kgfcm

Model	Speed(rpm)	500	416	300	250	200	166	150	120	100	83	75	60	50	41	37	30	25	20	16	15	12.5	10	8.3	7.5
Motor/ Gearhead	Ratio	3	3.6	5	6	7.5	9	10	12.5	15	18	20	25	30	36	40	50	60	75	90	100	120	150	180	200
K9R□40N□(–T, –T5)		0.73	0.87	1.22	1.46	1.82	2.19	2.43	3.04	3.65	4.37	4.37	5.47	6.56	7.87	8.75	10	10	10	10	10	10	10	10	10
K9G□B(C)		7.3	8.7	12.2	14.6	18.2	21.9	24.3	30.4	36.5	43.7	43.7	54.7	65.6	78.7	87.5	100	100	100	100	100	100	100	100	100

● 60Hz

unit = above : N·m / below : kgfcm

Model	Speed(rpm)	600	500	360	300	240	200	180	144	120	100	90	72	60	50	45	36	30	24	20	18	15	12	10	9
Motor/ Gearhead	Ratio	3	3.6	5	6	7.5	9	10	12.5	15	18	20	25	30	36	40	50	60	75	90	100	120	150	180	200
K9R□40N□(–T, –T5)		0.62	0.74	1.03	1.24	1.55	1.86	2.07	2.58	3.10	3.72	3.72	4.65	5.58	6.69	7.44	8.37	10	10	10	10	10	10	10	10
K9G□B(C)		6.2	7.4	10.3	12.4	15.5	18.6	20.7	25.8	31.0	37.2	37.2	46.5	55.8	66.9	74.4	83.7	100	100	100	100	100	100	100	100

* Gearhead and decimal gearhead are sold separately.
* The code in □ of gearhead model is for gear ratio.
* ▬ color indicates that the output shaft of the geared motor rotates in the same direction as the output shaft of the motor. Others indicate rotation in the opposite direction.
* If you are to have less ratio than the ratio in the table, you can install the decimal gearhead, which has one tenth of the ratio, between the gearhead and the motor. In this case, the permissible torque is 10N·m/100kgfcm.
* RPM is based on motor's synchronous rpm (50HZ:1500rpm, 60HZ:1800rpm) and calculated by dividing gear ratio. Actual rpm is 2~20% less than indicating rpm according to load size.

GEARHEADS

DIMENSIONS

K9RS40N□

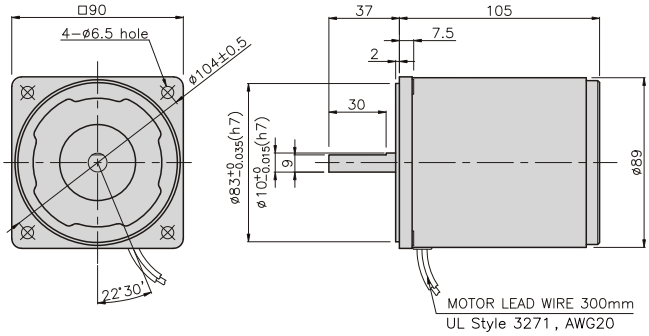

K9RS40N□−T

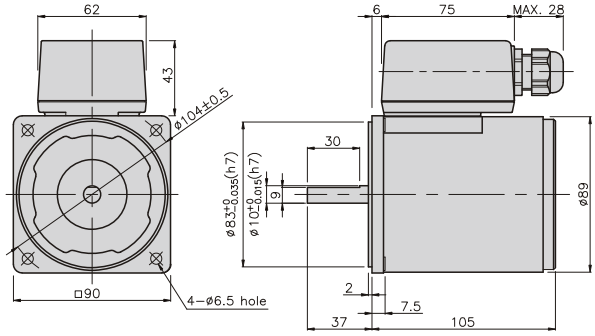

K9RS40N□−T5

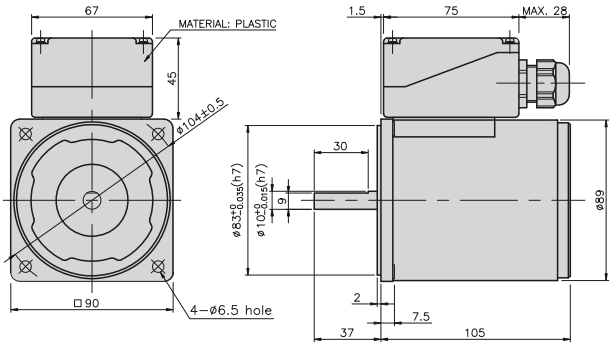

CONNECTION DIAGRAMS

K9RS40N□

single phase motor

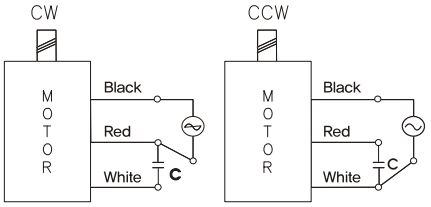

three phase motor

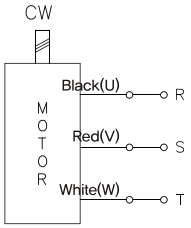

connecting two leadwires of U,V,W in turns

The direction of motor rotation is as viewed from the front shaft end of the motor

K9RS40N□−T

single phase motor

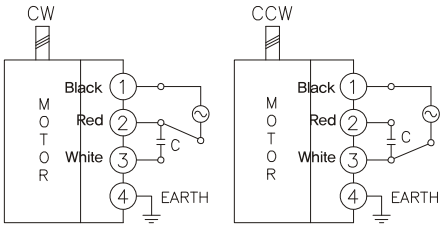

three phase motor

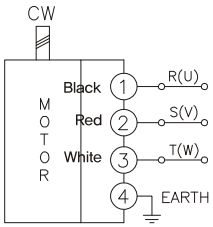

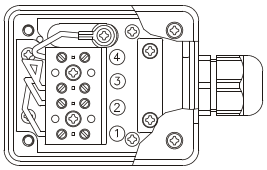

The direction of motor rotation is as viewed from the front shaft end of the motor

K9RS40N□−T5

single phase motor

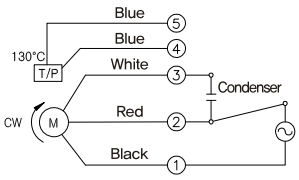

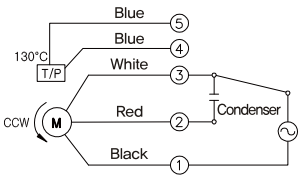

three phase motor

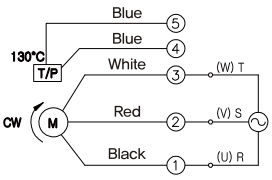

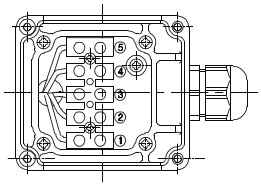

connecting two leadwires of U,V,W in turns

The direction of motor rotation is as viewed from the front shaft end of the motor

GEARHEADS

DIMENSIONS

K9G□B(C)

DECIMAL GEARHEAD

K9G10BX

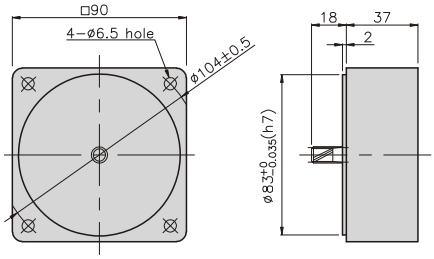

GEAR HEAD

K9G□B(C)

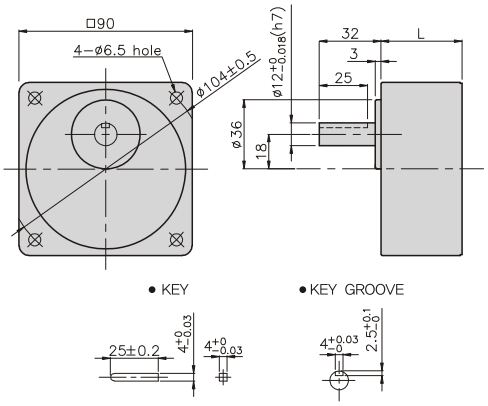

GEARHEADS

DIMENSIONS

K9RG40N□ + K9G□B(C)

K9RG40N□–T(–T5) + K9G□B(C)

K9RG40N□ + K9G□B(C)

DIMENSION TABLE

PART No	L	Application Model	Mounting BOLT
01	42	K9G3~18B(C)	M6 P1.0 X 65
02	60	K9G20~200B(C)	M6 P1.0 X 80
03	37	K9G10BX	M6 P1.0 X 120

WEIGHT

PART		WEIGHT(kg)
MOTOR		2.36
DECIMAL GEAR HEAD		0.60
GEAR HEAD	K9G3~18B(C)	0.78
	K9G20~40B(C)	1.04
	K9G50~200B(C)	1.14

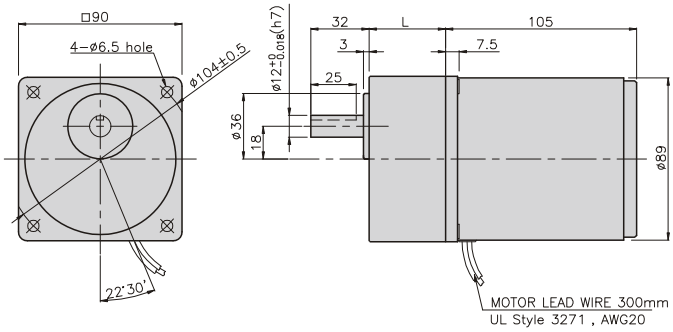

K9RG40N□–T + K9G□B(C)

DIMENSION TABLE

PART No	L	Application Model	Mounting BOLT
01	42	K9G3~18B(C)	M5 P1.0 X 65
02	60	K9G20~200B(C)	M5 P1.0 X 80
03	37	K9G10BX	M5 P1.0 X 120

WEIGHT

PART		WEIGHT(kg)
MOTOR		2.52
DECIMAL GEAR HEAD		0.60
GEAR HEAD	K9G3~18B(C)	0.78
	K9G20~40B(C)	1.04
	K9G50~200B(C)	1.14

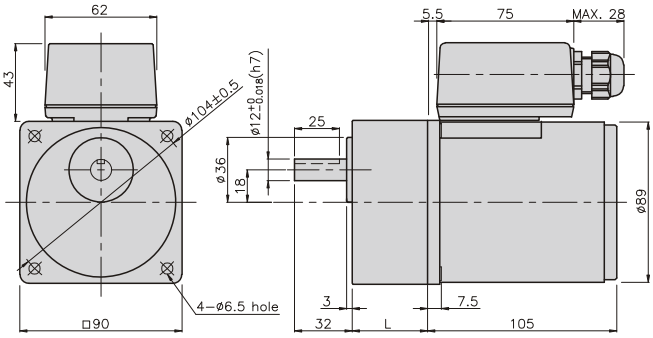

K9RG40N□–T5 + K9G□B(C)

DIMENSION TABLE

PART No	L	Application Model	Mounting BOLT
01	42	K9G3~18B(C)	M5 P1.0 X 65
02	60	K9G20~200B(C)	M5 P1.0 X 80
03	37	K9G10BX	M5 P1.0 X 120

WEIGHT

PART		WEIGHT(kg)
MOTOR		2.52
DECIMAL GEAR HEAD		0.60
GEAR HEAD	K9G3~18B(C)	0.78
	K9G20~40B(C)	1.04
	K9G50~200B(C)	1.14

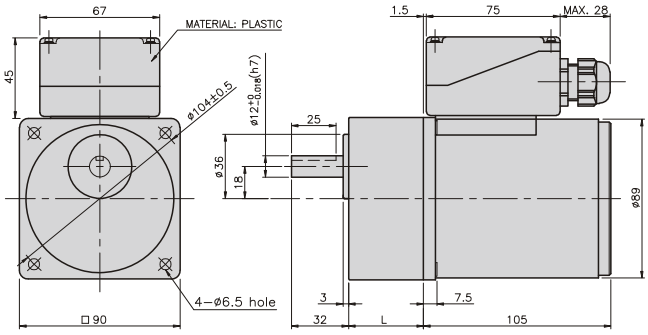

REVERSIBLE MOTOR

60W □90mm

LEAD WIRE TYPE
TERMINAL BOX TYPE

K9RS60F□

K9RS60F□–T, T5

SPECIFICATIONS

60W continuous rating, four poles

Model		Voltage (V)	Frequency (Hz)	Current (A)	Start T. (N∗m/ Kgf∗Cm)	Rated T. (N∗m/ Kgf∗Cm)	Speed (rpm)	Condenser (μF)
K9R□60FJ(–T, –T5)	single–phase	100	50	1.48	0.48/4.8	0.47/4.7	1250	25
			60	1.66		0.38/3.8	1550	
K9R□60FU(–T, –T5)		110	60	1.25	0.4/4	0.38/3.8	1550	17
		115		1.31	0.425/4.25			
K9R□60FL(–T, –T5)		200	50	0.72	0.5/5	0.47/4.7	1250	6
			60	0.76	0.44/4.4	0.39/3.9	1500	
K9R□60FC(–T, –T5)		220	50	0.69	0.45/4.5	0.47/4.7	1250	5
			60	0.76	0.48/4.8	0.38/3.8	1550	
		230	50	0.77	0.5/5	0.47/4.7	1250	
			60	0.79		0.38/3.8	1550	
K9R□60FD(–T, –T5)		240	50	0.75	0.5/5	0.47/4.7	1250	5

∗□ : SHAFT SHAPE (S : STRAIGHT, G : PINION)

RATED TORQUE OF GEARHEAD

● 50Hz

unit = above : N·m / below : kgfcm

Model	Speed(rpm)	500	416	300	250	200	166	150	120	100	83	75	60	50	41	37	30	25	20	16	15	12.5	10	8.3	7.5
Motor/ Gearhead	Ratio	3	3.6	5	6	7.5	9	10	12.5	15	18	20	25	30	36	40	50	60	75	90	100	120	150	180	200
K9R□60F□(–T, –T5)		1.14	1.37	1.90	2.28	2.86	3.43	3.81	4.28	5.14	6.17	6.85	7.71	9.25	11.10	12.33	15.42	18.50	20	20	20	20	20	20	20
K9P□B, BF		11.4	13.7	19.0	22.8	28.6	34.3	38.1	42.8	51.4	61.7	68.5	77.1	92.5	111.0	123.3	154.2	185	200	200	200	200	200	200	200

● 60Hz

unit = above : N·m / below : kgfcm

Model	Speed(rpm)	600	500	360	300	240	200	180	144	120	100	90	72	60	50	45	36	30	24	20	18	15	12	10	9
Motor/ Gearhead	Ratio	3	3.6	5	6	7.5	9	10	12.5	15	18	20	25	30	36	40	50	60	75	90	100	120	150	180	200
K9R□60F□(–T, –T5)		0.92	1.11	1.54	1.85	2.31	2.77	3.08	3.46	4.16	4.99	5.54	6.23	7.48	8.98	9.97	12.47	14.96	16.83	20	20	20	20	20	20
K9P□B, BF		9.2	11.1	15.4	18.5	23.1	27.7	30.8	34.6	41.6	49.9	55.4	62.3	74.8	89.8	99.7	124.7	149.6	168.3	200	200	200	200	200	200

* Gearhead and decimal gearhead are sold separately.
* The code in □ of gearhead model is for gear ratio.
* ▬ color indicates that the output shaft of the geared motor rotates in the same direction as the output shaft of the motor. Others indicate rotation in the opposite direction.
* If you are to have less ratio than the ratio in the table, you can install the decimal gearhead, which has one tenth of the ratio, between the gearhead and the motor. In this case, the permissible torque is 20N · m/200kgfcm.
* RPM is based on motor's synchronous rpm (50HZ:1500rpm, 60HZ:1800rpm) and calculated by dividing gear ratio. Actual rpm is 2~20% less than indicating rpm according to load size.

GEARHEADS

DIMENSIONS

K9RS60F□

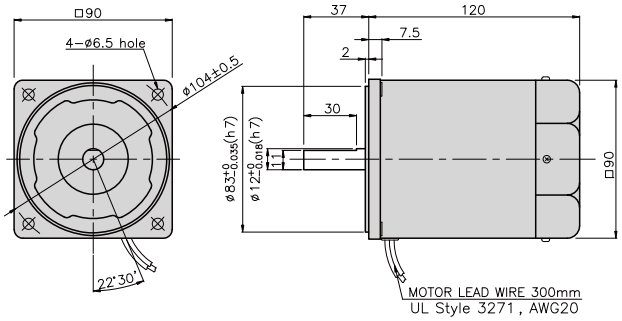

K9RS60F□−T

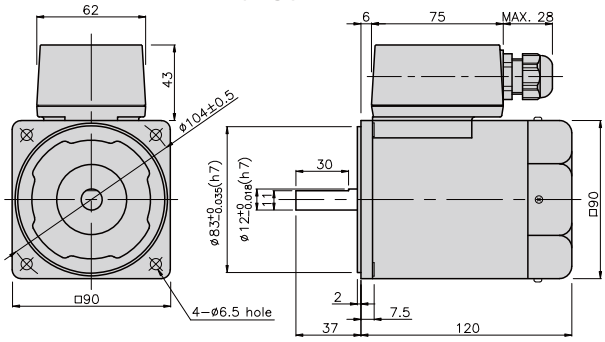

K9RS60F□−T5

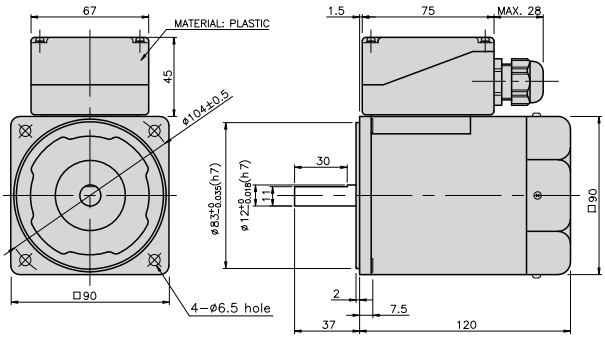

CONNECTION DIAGRAMS

K9RS60F□

single phase motor

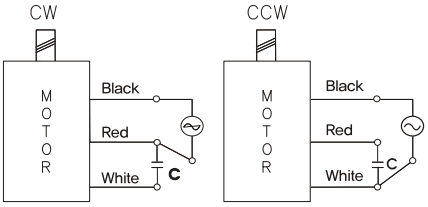

three phase motor

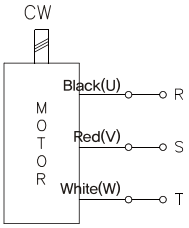

connecting two leadwires of U,V,W in turns

The direction of motor rotation is as viewed from the front shaft end of the motor

K9RS60F□−T

single phase motor

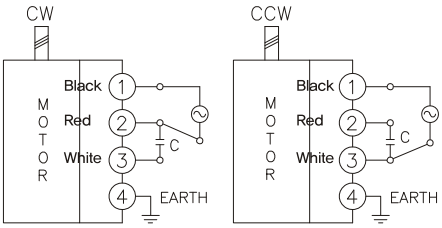

three phase motor

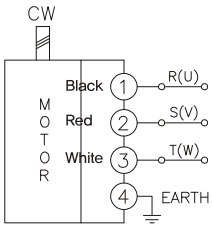

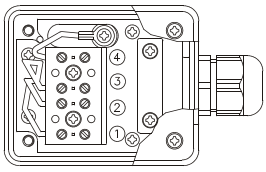

The direction of motor rotation is as viewed from the front shaft end of the motor

K9RS60F□−T5

single phase motor

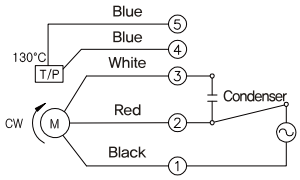

three phase motor

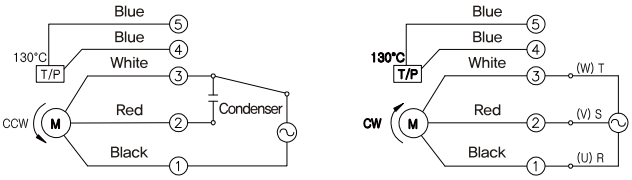

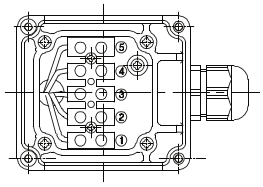

Condenser

connecting two leadwires of U,V,W in turns

The direction of motor rotation is as viewed from the front shaft end of the motor

GEARHEADS

DIMENSIONS

K9P□B

K9P□BF

DECIMAL GEARHEAD

K9P10BX

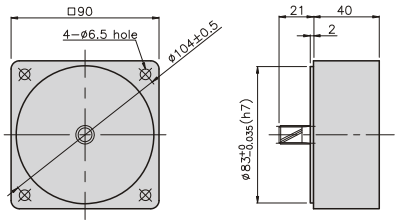

GEAR HEAD

K9P□B

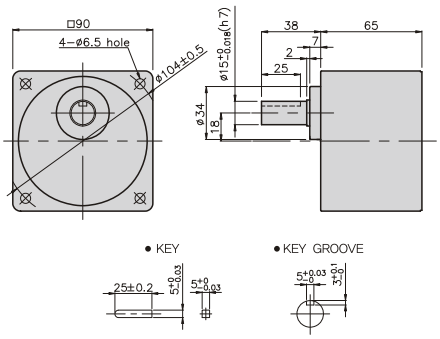

GEARHEAD

K9P□BF

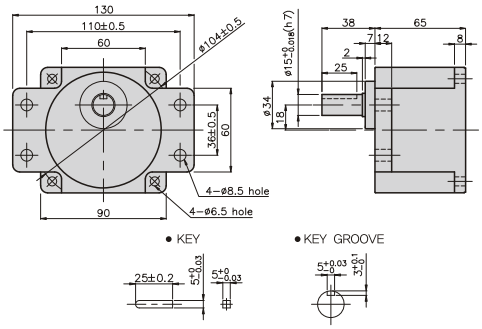

GEARHEADS

DIMENSIONS

K9RP60F□ + K9P□B

K9RP60F□ + K9P□BF

DIMENSION TABLE

PART No	L	Application Model	Mounting BOLT
01	65	K9P3~200B	M6 P1.0 X 95
02	40	K9P10BX	M6 P1.0 X 140

WEIGHT

PART		WEIGHT(kg)
MOTOR		2.50
DECIMAL GEAR HEAD		0.62
GEAR HEAD	K9P3~10B	1.22
	K9P12.5~20B	1.32
	K9P25~60B	1.42
	K9P75~200B	1.45

K9RP60F□ + K9P□B

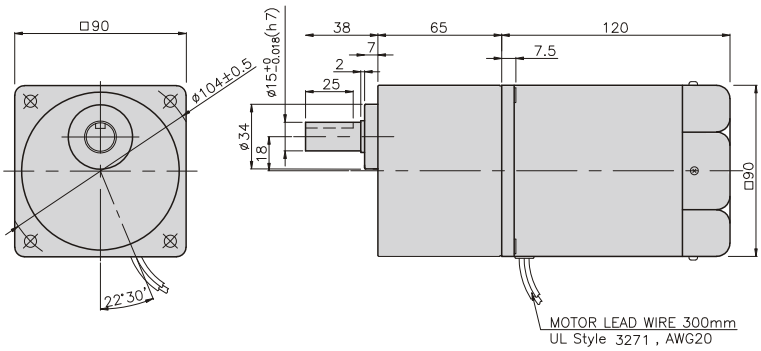

K9RP60F□ + K9P□BF

DIMENSION TABLE

PART No	L	Application Model	Mounting BOLT
01	65	K9P3~200BF	M6 P1.0 X 25
02	40	K9P10BX	M6 P1.0 X 65

WEIGHT

PART		WEIGHT(kg)
MOTOR		3.00
DECIMAL GEAR HEAD		0.62
GEAR HEAD	K9P3~10BF	1.22
	K9P12.5~20BF	1.30
	K9P25~60BF	1.42
	K9P75~200BF	1.44

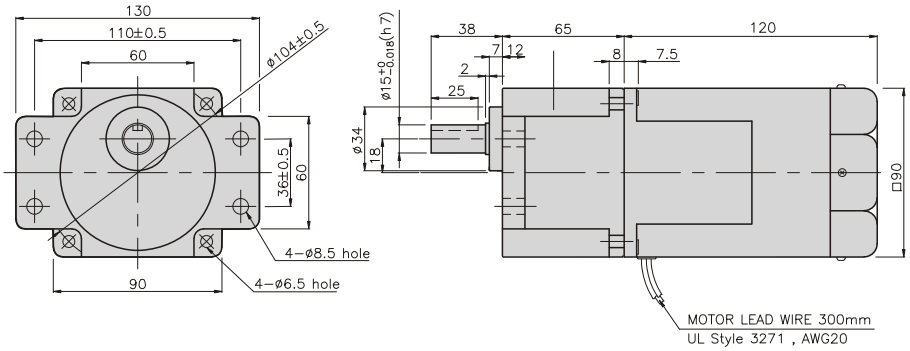

GEARHEADS

DIMENSIONS

K9RP60F□–T + K9P□B

K9RP60F□–T + K9P□BF

K9RP60F□–T + K9P□B

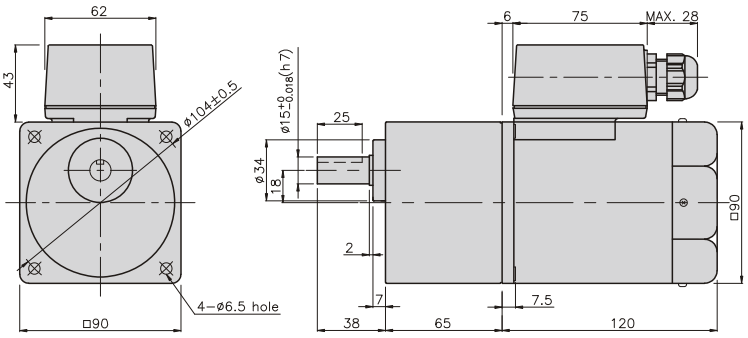

DIMENSION TABLE

PART No	L	Application Model	Mounting BOLT
01	65	K9P3~200B	M6 P1.0 X 95
02	40	K9P10BX	M6 P1.0 X 140

WEIGHT

PART		WEIGHT(kg)
MOTOR		2.68
DECIMAL GEAR HEAD		0.62
GEAR HEAD	K9P3~10B	1.22
	K9P12.5~20B	1.32
	K9P25~60B	1.42
	K9P75~200B	1.45

K9RP60F□–T + K9P□BF

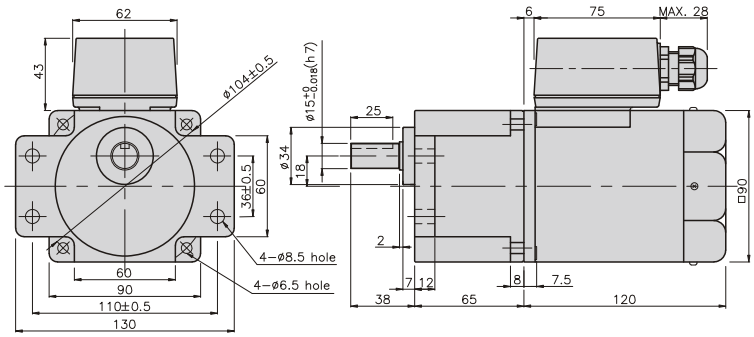

DIMENSION TABLE

PART No	L	Application Model	Mounting BOLT
01	65	K9P3~200B	M6 P1.0 X 95
02	40	K9P10BX	M6 P1.0 X 140

WEIGHT

PART		WEIGHT(kg)
MOTOR		2.68
DECIMAL GEAR HEAD		0.62
GEAR HEAD	K9P3~10BF	1.22
	K9P12.5~20BF	1.32
	K9P25~60BF	1.42
	K9P75~200BF	1.45

GEARHEADS

DIMENSIONS

K9RP60F□–T5 + K9P□B

K9RP60F□–T5 + K9P□BF

K9RP60F□–T5 + K9P□B

DIMENSION TABLE

PART No	L	Application Model	Mounting BOLT
01	65	K9P3~200B	M6 P1.0 X 95
02	40	K9P10BX	M6 P1.0 X 140

WEIGHT

PART		WEIGHT(kg)
MOTOR		2.68
DECIMAL GEAR HEAD		0.62
GEAR HEAD	K9P3~10B	1.22
	K9P12.5~20B	1.32
	K9P25~60B	1.42
	K9P75~200B	1.45

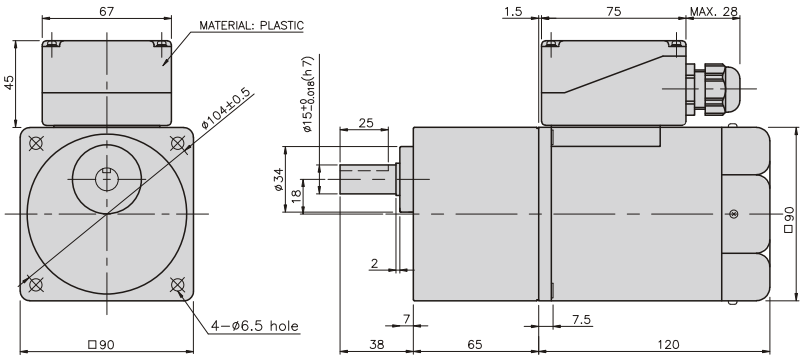

K9RP60F□–T5 + K9P□BF

DIMENSION TABLE

PART No	L	Application Model	Mounting BOLT
01	65	K9P3~200B	M6 P1.0 X 95
02	40	K9P10BX	M6 P1.0 X 140

WEIGHT

PART		WEIGHT(kg)
MOTOR		2.68
DECIMAL GEAR HEAD		0.62
GEAR HEAD	K9P3~10BF	1.22
	K9P12.5~20BF	1.32
	K9P25~60BF	1.42
	K9P75~200BF	1.45

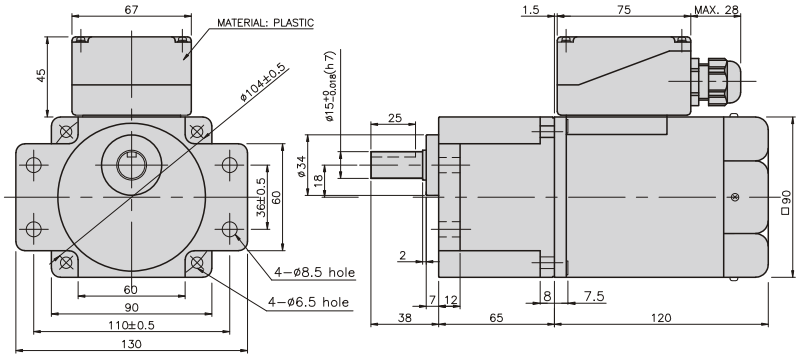

REVERSIBLE MOTOR

90W □90mm

LEAD WIRE TYPE
TERMINAL BOX TYPE

K9RS90F□

K9RS90F□–T, T5

SPECIFICATIONS

90W continuous rating, four poles

Model		Voltage (V)	Frequency (Hz)	Current (A)	Start T. (N*m/ Kgf*Cm)	Rated T. (N*m/ Kgf*Cm)	Speed (rpm)	Condenser (μF)
K9R□90FJ(–T, –T5)	single –phase	100	50	2.52	0.6/6	0.705/7.05	1250	35
			60	2.42		0.57/5.7	1550	
K9R□90FU(–T, –T5)		110	60	1.88	0.55/5.5	0.57/5.7	1550	25
		115		2.12				
K9R□90FL(–T, –T5)		220	50	0.9	0.55/5.5	0.705/7.05	1250	8
			60	1.1		0.57/5.7	1550	
K9R□90FC(–T, –T5)		220	50	1	0.5/5	0.705/7.05	1250	7
			60	1.1	0.53/5.3	0.57/5.7	1550	
		230	50	1.3	0.6/6	0.705/7.05	1250	
			60	1.1		0.57/5.7	1550	
K9R□90FD(–T, –T5)		240	50	0.94	0.55/5.5	0.705/7.05	1250	6

□ : SHAFT SHAPE (S : STRAIGHT, G : PINION)

RATED TORQUE OF GEARHEAD

● 50Hz

unit = above : N · m / below : kgfcm

Model	Speed(rpm)	500	416	300	250	200	166	150	120	100	83	75	60	50	41	37	30	25	20	16	15	12.5	10	8.3	7.5
Motor/ Gearhead	Ratio	3	3.6	5	6	7.5	9	10	12.5	15	18	20	25	30	36	40	50	60	75	90	100	120	150	180	200
K9R□90F□(–T, –T5)		1.71	2.06	2.86	3.43	4.28	5.14	5.71	6.42	7.71	9.25	10.28	11.56	13.88	16.65	18.5	20	20	20	20	20	20	20	20	20
K9P□B, BF		17.1	20.6	28.6	34.3	42.8	51.4	57.1	64.2	77.1	92.5	102.8	115.6	138.8	166.5	185.0	200	200	200	200	200	200	200	200	200

● 60Hz

unit = above : N · m / below : kgfcm

Model	Speed(rpm)	600	500	360	300	240	200	180	144	120	100	90	72	60	50	45	36	30	24	20	18	15	12	10	9
Motor/ Gearhead	Ratio	3	3.6	5	6	7.5	9	10	12.5	15	18	20	25	30	36	40	50	60	75	90	100	120	150	180	200
K9R□90F□(–T, –T5)		1.39	1.66	2.31	2.77	3.46	4.16	4.62	5.19	6.23	7.48	8.31	9.35	11.22	13.46	14.96	18.7	20	20	20	20	20	20	20	20
K9P□B, BF		13.9	16.6	23.1	27.7	34.6	41.6	46.2	51.9	62.3	74.8	83.1	93.5	112.2	134.6	149.6	187	200	200	200	200	200	200	200	200

* Gearhead and decimal gearhead are sold separately.
* The code in □ of gearhead model is for gear ratio.
* ▬ color indicates that the output shaft of the geared motor rotates in the same direction as the output shaft of the motor. Others indicate rotation in the opposite direction.
* If you are to have less ratio than the ratio in the table, you can install the decimal gearhead, which has one tenth of the ratio, between the gearhead and the motor. In this case, the permissible torque is 20N · m/200kgfcm.
* RPM is based on motor's synchronous rpm (50HZ:1500rpm, 60HZ:1800rpm) and calculated by dividing gear ratio. Actual rpm is 2~20% less than indicating rpm according to load size.

GEARHEADS

RATED TORQUE OF GEARHEAD

● 50Hz

unit = above : N · m / below : kgfcm

Model	Speed(rpm)	500	416	300	250	200	166	150	120	100	83	75	60	50	41	37	30	25	20	16	15	13	10	8.3	7.5
Motor/ Gearhead	Ratio	3	3.6	5	6	7.5	9	10	12.5	15	18	20	25	30	36	40	50	60	75	90	100	120	150	180	200
K9R□90F□(–T, –T5)		1.71	2.06	2.86	3.43	4.28	5.14	5.71	6.42	7.71	9.25	10.28	11.56	13.88	16.65	18.50	23.13	27.75	30	30	30	30	30	30	30
K9RP□BU, BUF		17.1	20.6	28.6	34.3	42.8	51.4	57.1	64.2	77.1	92.5	102.8	115.6	138.8	165.6	185.0	231.3	277.5	300	300	300	300	300	300	300

● 60Hz

unit = above : N · m / below : kgfcm

Model	Speed(rpm)	600	500	360	300	240	200	180	144	120	100	90	72	60	50	45	36	30	24	20	18	15	12	10	9
Motor/ Gearhead	Ratio	3	3.6	5	6	7.5	9	10	12.5	15	18	20	25	30	36	40	50	60	75	90	100	120	150	180	200
K9R□90F□(–T, –T5)		1.39	1.66	2.31	2.77	3.46	4.16	4.62	5.19	6.23	7.48	8.31	9.35	11.22	13.46	14.96	18.70	22.44	25.24	30	30	30	30	30	30
K9RP□BU, BUF		13.9	16.6	23.1	27.7	34.6	41.6	46.2	51.9	62.3	74.8	83.1	93.5	112.2	134.6	149.6	187.0	224.4	252.4	300	300	300	300	300	300

* Gearhead and decimal gearhead are sold separately.
* The code in □ of gearhead model is for gear ratio.
* ▬ color indicates that the output shaft of the geared motor rotates in the same direction as the output shaft of the motor. Others indicate rotation in the opposite direction.
* If you are to have less ratio than the ratio in the table, you can install the decimal gearhead, which has one tenth of the ratio, between the gearhead and the motor. In this case, the permissible torque is 30N · m/300kgfcm.
* RPM is based on motor's synchronous rpm (50HZ:1500rpm, 60HZ:1800rpm) and calculated by dividing gear ratio. Actual rpm is 2~20% less than indicating rpm according to load size.

DIMENSIONS

K9RS90F□

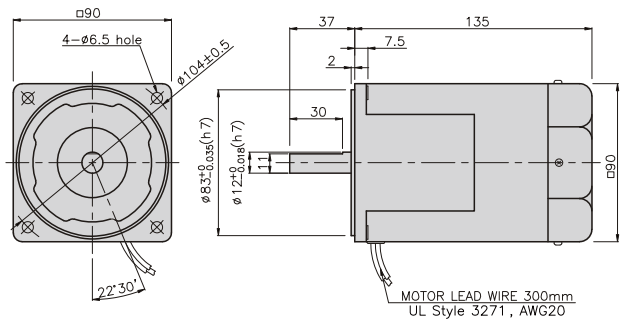

K9RS90F□–T

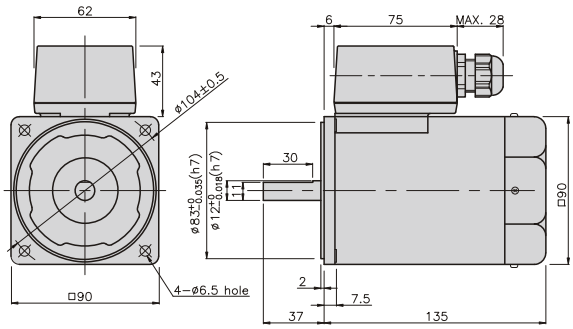

K9RS90F□–T5

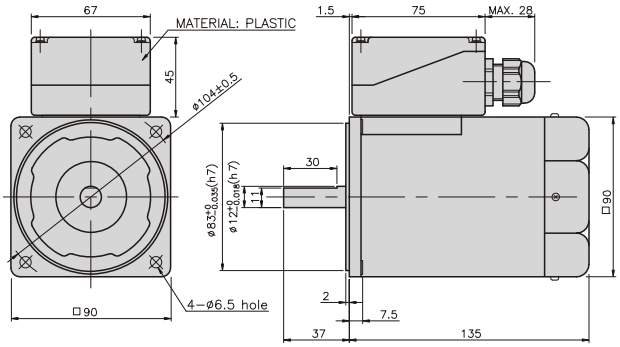

REVERSIBLE MOTORS

GEARHEADS

CONNECTION DIAGRAMS

K9RS90F□

single phase motor

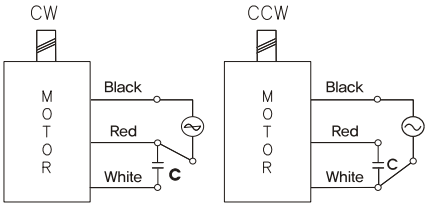

three phase motor

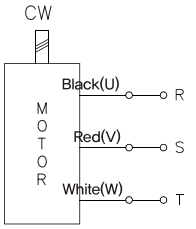

connecting two leadwires of U,V,W in turns

The direction of motor rotation is as viewed from the front shaft end of the motor

K9RS90F□-T

single phase motor

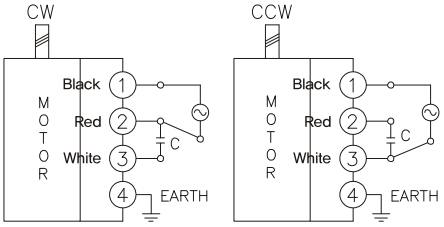

three phase motor

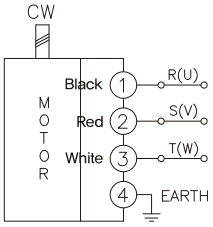

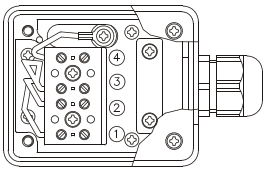

The direction of motor rotation is as viewed from the front shaft end of the motor

K9RS90F□-T5

single phase motor

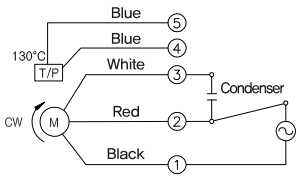

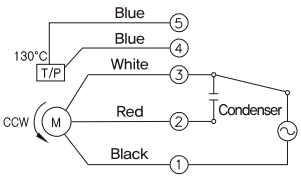

three phase motor

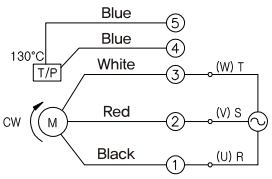

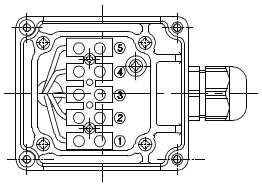

connecting two leadwires of U,V,W in turns

The direction of motor rotation is as viewed from the front shaft end of the motor

GEARHEADS

DIMENSIONS

K9P□B

K9P□BF, BUF

K9P□BU

DECIMAL GEARHEAD

K9P10BX

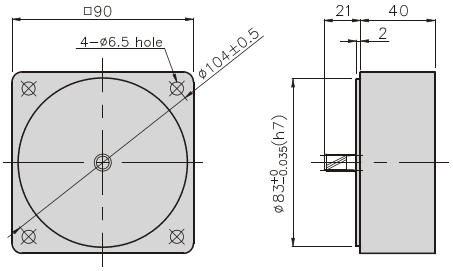

GEAR HEAD

K9P□B

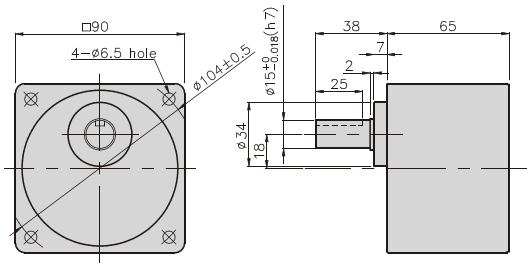

GEARHEAD

K9P□BF

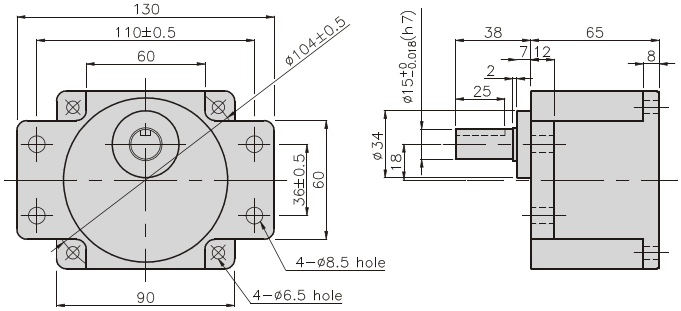

GEARHEAD

K9P□BU

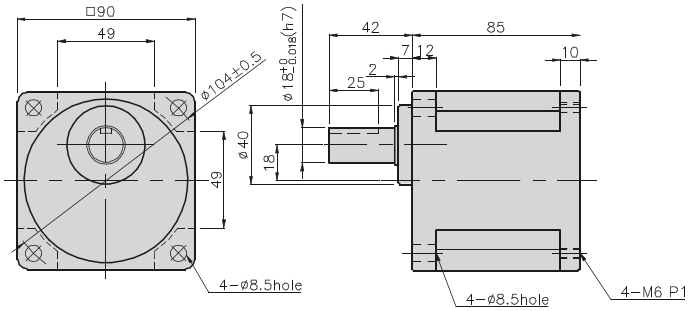

GEARHEAD

K9P□BUF

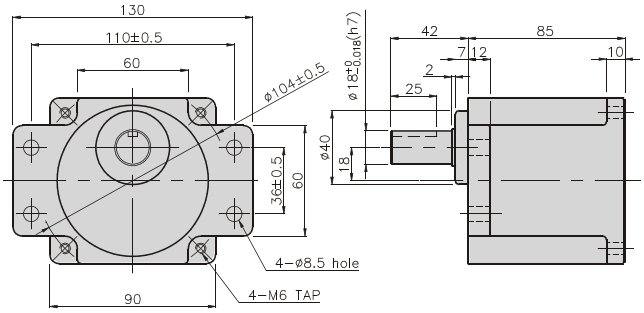

● KEY

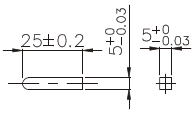

● KEY GROOVE

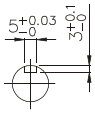

GEARHEADS

DIMENSIONS

K9RP90F□ + K9P□B

K9RP90F□ + K9P□BF, BUF

K9RP90F□ + K9P□BU

K9RP90F□ + K9P□B

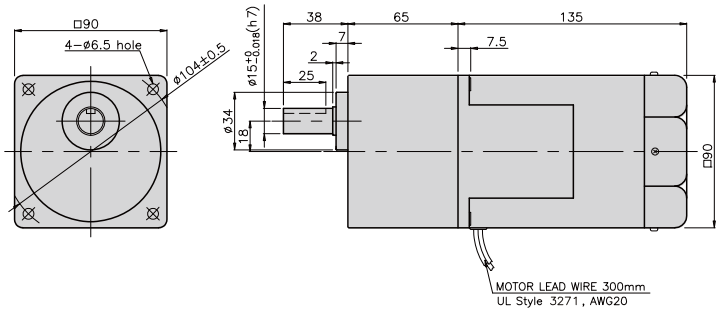

WEIGHT

PART	WEIGHT(kg)
MOTOR	3.00
DECIMAL GEAR HEAD	0.62

DIMENSION TABLE

PART No	L	Application Model	Mounting BOLT
01	65	K9P3~200B	M6 P1.0 X 95
02	40	K9P10BX	M6 P1.0 X 140

WEIGHT

PART	WEIGHT(kg)
K9P3~10B	1.22
K9P12.5~20B	1.32
K9P25~60B	1.42
K9P75~200B	1.45

K9RP90F□ + K9P□BF

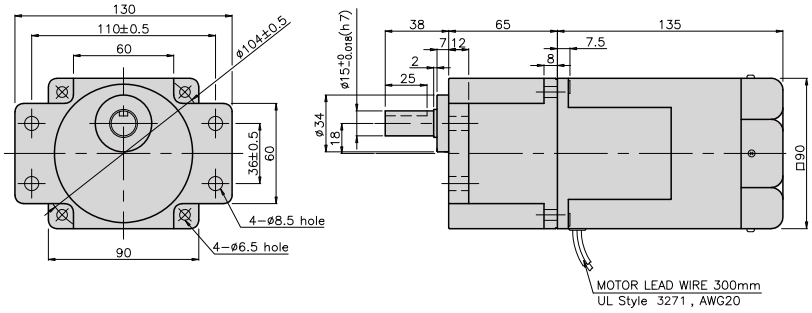

DIMENSION TABLE

PART No	L	Application Model	Mounting BOLT
01	65	K9P3~200BF	M6 P1.0 X 25
02	40	K9P10BX	M6 P1.0 X 65

WEIGHT

PART	WEIGHT(kg)
K9P3~10BF	1.22
K9P12.5~20BF	1.30
K9P25~60BF	1.42
K9P75~200BF	1.44

K9RP90F□ + K9P□BU

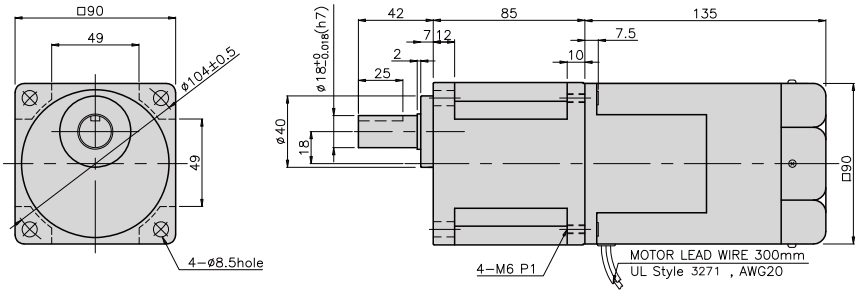

DIMENSION TABLE

PART No	L	Application Model	Mounting BOLT
01	85	K9P3~200BU	M6 P1.0 X 20
02	40	K9P10BX	M6 P1.0 X 60

WEIGHT

PART	WEIGHT(kg)
K9P3~10BU	1.44
K9P12.5~20BU	1.55
K9P25~60BU	1.69
K9P75~200BU	1.74

K9RP90F□ + K9P□BUF

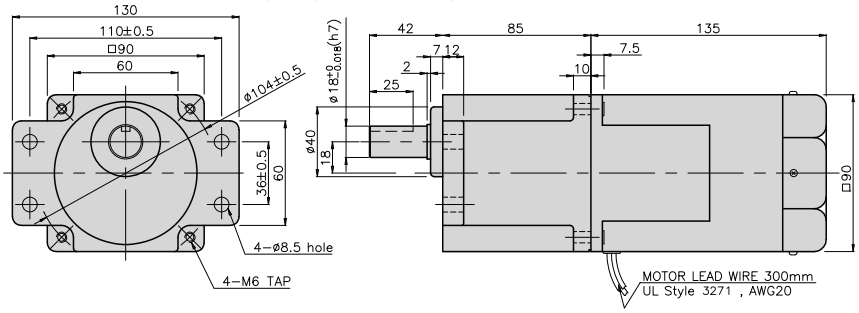

DIMENSION TABLE

PART No	L	Application Model	Mounting BOLT
01	85	K9P3~200BUF	M6 P1.0 X 20
02	40	K9P10BX	M6 P1.0 X 65

WEIGHT

PART	WEIGHT(kg)
K9P3~10BUF	1.50
K9P12.5~20BUF	1.62
K9P25~60BUF	1.76
K9P75~200BUF	1.82

GEARHEADS

DIMENSIONS

K9RP90F□–T + K9P□B

K9RP90F□–T + K9P□BF, BUF

K9RP90F□–T + K9P□BU

K9RP90F□–T + K9P□B

WEIGHT

PART	WEIGHT(kg)
MOTOR	3.18
DECIMAL GEAR HEAD	0.62

DIMENSION TABLE

PART No	L	Application Model	Mounting BOLT
01	65	K9P3~200B	M6 P1.0 X 95
02	40	K9P10BX	M6 P1.0 X 140

WEIGHT

PART	WEIGHT(kg)
K9P3~10B	1.22
K9P12.5~20B	1.32
K9P25~60B	1.42
K9P75~200B	1.45

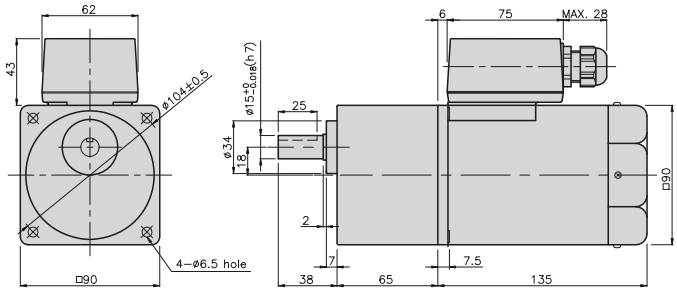

K9RP90F□–T + K9P□BF

DIMENSION TABLE

PART No	L	Application Model	Mounting BOLT
01	65	K9P3~200BF	M6 P1.0 X 25
02	40	K9P10BX	M6 P1.0 X 65

WEIGHT

PART	WEIGHT(kg)
K9P3~10BF	1.22
K9P12.5~20BF	1.30
K9P25~60BF	1.42
K9P75~200BF	1.44

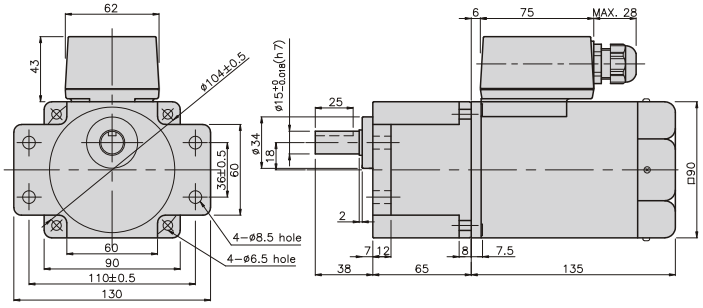

K9RP90F□–T + K9P□BU

DIMENSION TABLE

PART No	L	Application Model	Mounting BOLT
01	85	K9P3~200BU	M6 P1.0 X 20
02	40	K9P10BX	M6 P1.0 X 60

WEIGHT

PART	WEIGHT(kg)
K9P3~10BU	1.44
K9P12.5~20BU	1.55
K9P25~60BU	1.69
K9P75~200BU	1.74

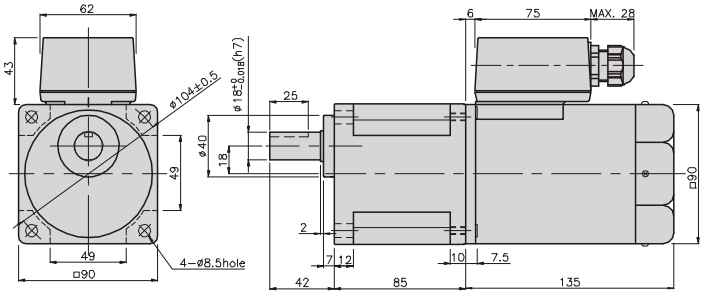

K9RP90F□–T + K9P□BUF

DIMENSION TABLE

PART No	L	Application Model	Mounting BOLT
01	85	K9P3~200BUF	M6 P1.0 X 20
02	40	K9P10BX	M6 P1.0 X 65

WEIGHT

PART	WEIGHT(kg)
K9P3~10BUF	1.50
K9P12.5~20BUF	1.62
K9P25~60BUF	1.76
K9P75~200BUF	1.82

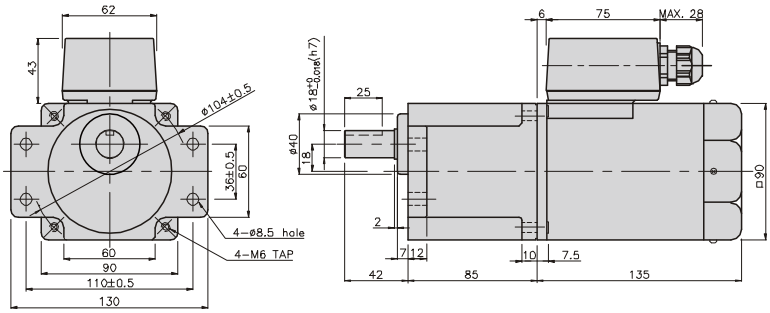

GEARHEADS

DIMENSIONS

K9RP90F□-T5 + K9P□B

K9RP90F□-T5 + K9P□BF, BUF

K9RP90F□-T5 + K9P□BU

K9RP90F□-T5 + K9P□B

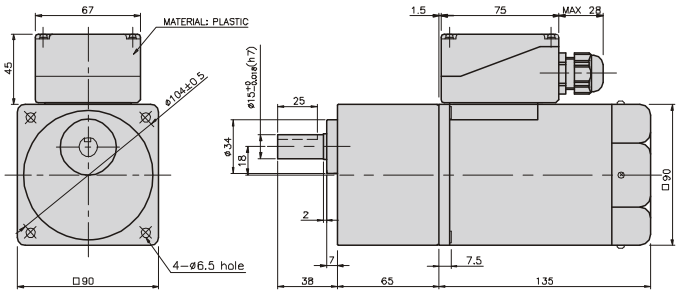

WEIGHT

PART	WEIGHT(kg)
MOTOR	3.18
DECIMAL GEAR HEAD	0.62

DIMENSION TABLE

PART No	L	Application Model	Mounting BOLT
01	65	K9P3~200B	M6 P1.0 X 95
02	40	K9P10BX	M6 P1.0 X 140

WEIGHT

PART	WEIGHT(kg)
K9P3~10B	1.22
K9P12.5~20B	1.32
K9P25~60B	1.42
K9P75~200B	1.45

K9RP90F□-T5 + K9P□BF

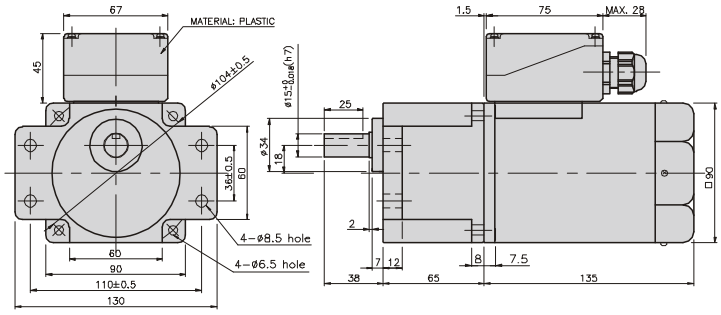

DIMENSION TABLE

PART No	L	Application Model	Mounting BOLT
01	65	K9P3~200BF	M6 P1.0 X 25
02	40	K9P10BX	M6 P1.0 X 65

WEIGHT

PART	WEIGHT(kg)
K9P3~10BF	1.22
K9P12.5~20BF	1.30
K9P25~60BF	1.42
K9P75~200BF	1.44

K9RP90F□-T5 + K9P□BU

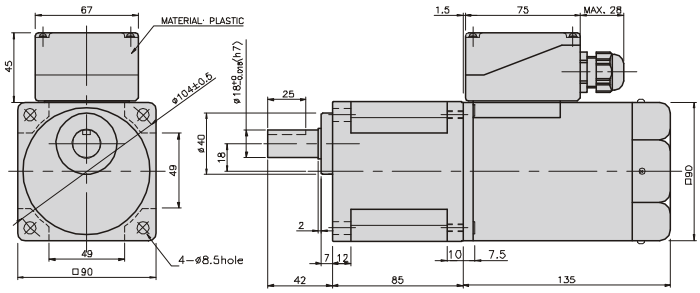

DIMENSION TABLE

PART No	L	Application Model	Mounting BOLT
01	85	K9P3~200BU	M6 P1.0 X 20
02	40	K9P10BX	M6 P1.0 X 60

WEIGHT

PART	WEIGHT(kg)
K9P3~10BU	1.44
K9P12.5~20BU	1.55
K9P25~60BU	1.69
K9P75~200BU	1.74

K9RP90F□-T5 + K9P□BUF

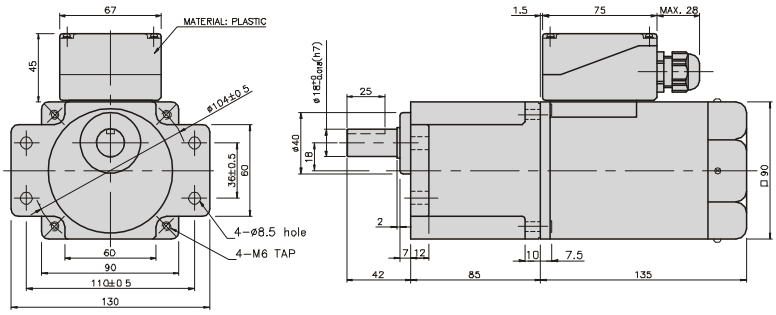

DIMENSION TABLE

PART No	L	Application Model	Mounting BOLT
01	85	K9P3~200BUF	M6 P1.0 X 20
02	40	K9P10BX	M6 P1.0 X 65

WEIGHT

PART	WEIGHT(kg)
K9P3~10BUF	1.50
K9P12.5~20BUF	1.62
K9P25~60BUF	1.76
K9P75~200BUF	1.82