BRAKE MOTOR

6W □60mm

K6RS6N□–B

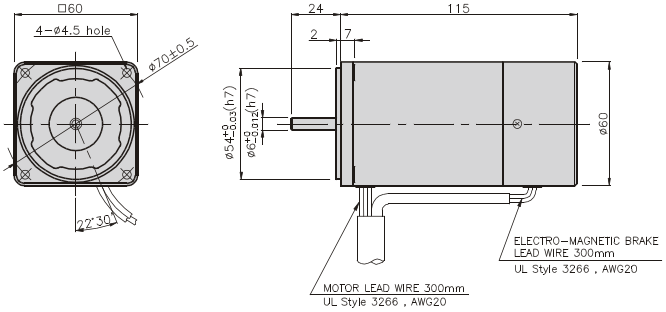

SPECIFICATIONS

6W 30 minutes rating, four poles

Model		Duty	Voltage (V)	Frequency (Hz)	Current (A)	Start T. (N*m/ Kgf*cm)	Rated T. (N*m/ Kgf*cm)	Speed (rpm)	Condenser (μF)	Friction T. (N*m/ (Kgf*cm)
K6R□6NJ–B	single–phase	30 minutes	100	50	0.25	0.035/0.35	0.049/0.49	1200	3	0.2/2
				60	0.23		0.04/0.4	1500		
K6R□6NU–B			110	60	0.2	0.045/0.45	0.04/0.4	1500	2.5	0.2/2
			115		0.2	0.05/0.5				
K6R□6NL–B			200	50	0.12	0.055/0.55	0.049/0.49	1200	1	0.2/2
				60	0.13		0.04/0.4	1500		
K6R□6NC–B			220	50	0.12	0.045/0.45	0.047/0.47	1250	0.8	0.2/2
				60	0.12		0.04/0.4	1500		
			230	50	0.15	0.055/0.55	0.047/0.47	1250		
				60	0.13	0.06/0.6	0.04/0.4	1500		
K6R□6ND–B			240	50	0.12	0.048/0.48	0.047/0.47	1250	0.6	0.2/2

* □ : SHAFT SHAPE (S : STRAIGHT, G : PINION)

RATED TORQUE OF GEARHEAD

● 50Hz

unit = above : N · m / below : kgfcm

Model	Speed(rpm)	500	416	300	250	200	166	150	120	100	83	75	60	50	41	37	30	25	20	16	15	12.5	10	8.3	7.5	6
Motor/ Gearhead	Ratio	3	3.6	5	6	7.5	9	10	12.5	15	18	20	25	30	36	40	50	60	75	90	100	120	150	180	200	250
K6R□6N□–B		0.11	0.14	0.19	0.23	0.29	0.34	0.38	0.48	0.57	0.69	0.69	0.86	1.03	1.23	1.37	1.54	1.85	2.31	2.78	3	3	3	3	3	3
K6G□B(C)		1.1	1.4	1.9	2.3	2.9	3.4	3.8	4.8	5.7	6.9	6.9	8.6	10.3	12.3	13.7	15.4	18.5	23.1	27.8	30	30	30	30	30	30

● 60Hz

unit = above : N · m / below : kgfcm

Model	Speed(rpm)	600	500	360	300	240	200	180	144	120	100	90	72	60	50	45	36	30	24	20	18	15	12	10	9	7.2
Motor/ Gearhead	Ratio	3	3.6	5	6	7.5	9	10	12.5	15	18	20	25	30	36	40	50	60	75	90	100	120	150	180	200	250
K6R□6N□–B		0.10	0.12	0.16	0.19	0.24	0.29	0.32	0.41	0.49	0.58	0.58	0.73	0.87	1.05	1.17	1.31	1.57	1.97	2.36	2.62	3	3	3	3	3
K6G□B(C)		1.0	1.2	1.6	1.9	2.4	2.9	3.2	4.1	4.9	5.8	5.8	7.3	8.7	10.5	11.7	13.1	15.7	19.7	23.6	26.2	30	30	30	30	30

* Gearhead and decimal gearhead are sold separately.
* The code in □ of gearhead model is for gear ratio.
* ▬ color indicates that the output shaft of the geared motor rotates in the same direction as the output shaft of the motor. Others indicate rotation in the opposite direction.
* If you are to have less ratio than the ratio in the table, you can install the decimal gearhead, which has one tenth of the ratio, between the gearhead and the motor. In this case, the permissible torque is 3N · m/30kgfcm.
* RPM is based on motor's synchronous rpm (50HZ:1500rpm, 60HZ:1800rpm) and calculated by dividing gear ratio. Actual rpm is 2~20% less than indicating rpm according to load size.

GEARHEADS

CONNECTION DIAGRAMS

Connect Cr circuit for absorbing serge voltage as connection diagram to protect contact point.
Ro = 5 – 200Ω
Co = 0.1 ~ 0.2μF 200WV(400WV)

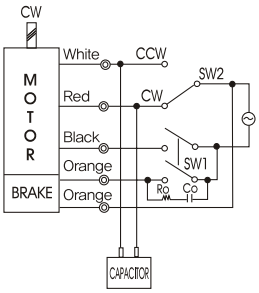

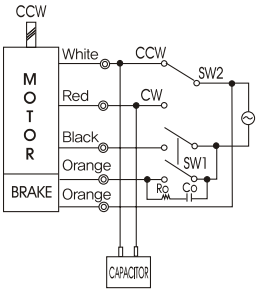

※The direction of motor rotation is as viewed from the front shaft end of the motor

DIMENSIONS

K6G□B(C)

K6RG6N□–B + K6G□B(C)

DECIMAL GEARHEAD

K6G10BX

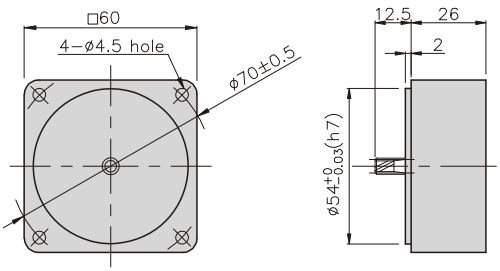

GEARHEAD

K6G□B(C)

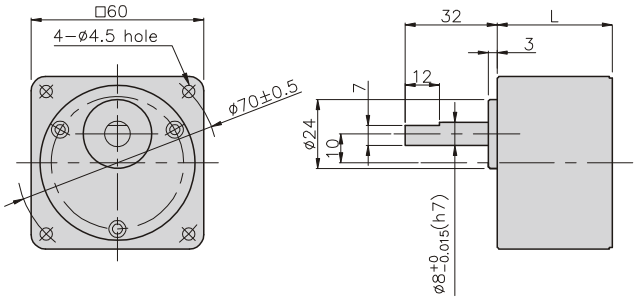

DIMENSION TABLE

PART No	L	Application Model	Mounting BOLT
01	30	K6G3~18B(C)	M4 P0.7 X 50
02	40	K6G20~250B(C)	M4 P0.7 X 60
03	26	K6G10BX	M4 P0.7 X 85

WEIGHT

PART		WEIGHT(kg)
MOTOR		0.93
DECIMAL GEAR HEAD		0.22
GEAR HEAD	K6G3~18B(C)	0.26
	K6G30~40B(C)	0.33
	K6G50~250B(C)	0.36

K6RG6N□–B + K6G□B(C)

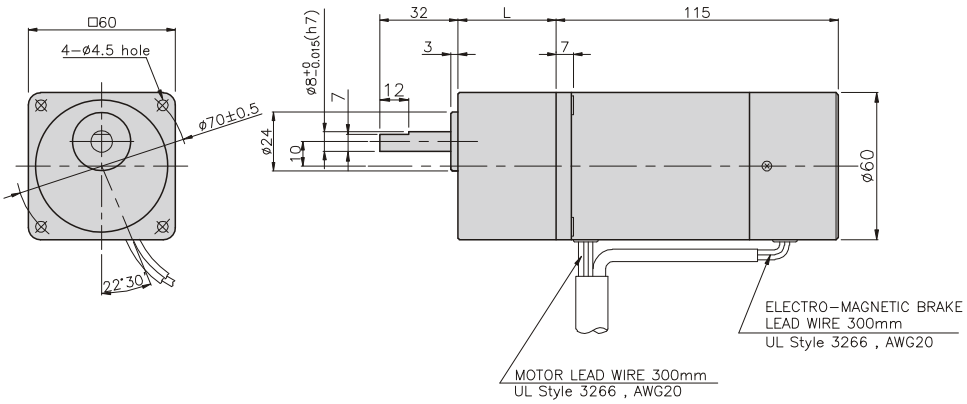

BRAKE MOTOR

15W □70mm

K7RS15N□–B

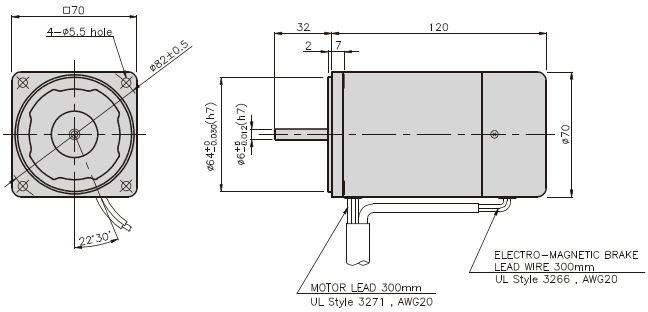

SPECIFICATIONS

15W 30 minutes rating, four poles

Model		Duty	Voltage (V)	Frequency (Hz)	Current (A)	Start T. (N*m/ Kgf*cm)	Rated T. (N*m/ Kgf*cm)	Speed (rpm)	Condenser (μF)	Friction T. (N*m/ (Kgf*cm)
K7R□15NJ–B	single–phase	30 minutes	100	50	0.46	0.115/1.15	0.12/1.2	1250	7	0.2/2
				60	0.48		0.1/1	1500		
K7R□15NU–B			110	60	0.47	0.12/1.2	0.1/1	1500	6	0.2/2
			115		0.49	0.125/1.25				
K7R□15NL–B			200	50	0.23	0.115/1.15	0.122/1.22	1250	2	0.2/2
				60	0.28		0.1/1	1500		
K7R□15NC–B			220	50	0.21	0.115/1.15	0.12/1.2	1250	1.5	0.2/2
				60	0.24		0.1/1	1500		
			230	50	0.25	0.125/1.25	0.12/1.2	1250		
				60	0.24		0.1/1	1500		
K7R□15ND–B			240	50	0.25	0.13/1.3	0.12/1.2	1250	1.5	0.2/2

* □ : SHAFT SHAPE (S : STRAIGHT, G : PINION)

RATED TORQUE OF GEARHEAD

● 50Hz

unit = above : N · m / below : kgfcm

Model / Motor/ Gearhead	Speed(rpm)	500	416	300	250	200	166	150	120	100	83	75	60	50	41	37	30	25	20	16	15	12.5	10	8.3	7.5
	Ratio	3	3.6	5	6	7.5	9	10	12.5	15	18	20	25	30	36	40	50	60	75	90	100	120	150	180	200
K7R□15N□–B K7G□B(C)		0.29	0.35	0.49	0.58	0.73	0.87	0.97	1.22	1.46	1.75	1.75	2.19	2.62	3.15	3.50	3.94	4.72	5	5	5	5	5	5	5
		2.9	3.5	4.9	5.8	7.3	8.7	9.7	12.2	14.6	17.5	17.5	21.9	26.2	31.5	35.0	39.4	47.2	50	50	50	50	50	50	50

● 60Hz

unit = above : N · m / below : kgfcm

Model / Motor/ Gearhead	Speed(rpm)	600	500	360	300	240	200	180	144	120	100	90	72	60	50	45	36	30	24	20	18	15	12	10	9
	Ratio	3	3.6	5	6	7.5	9	10	12.5	15	18	20	25	30	36	40	50	60	75	90	100	120	150	180	200
K7R□15N□–B K7G□B(C)		0.24	0.29	0.41	0.49	0.61	0.73	0.81	1.01	1.22	1.46	1.46	1.82	2.19	2.62	2.92	3.28	3.94	4.92	5	5	5	5	5	5
		2.4	2.9	4.1	4.9	6.1	7.3	8.1	10.1	12.2	14.6	14.6	18.2	21.9	26.2	29.2	32.8	39.4	49.2	50	50	50	50	50	50

* Gearhead and decimal gearhead are sold separately.
* The code in □ of gearhead model is for gear ratio.
* ▬ color indicates that the output shaft of the geared motor rotates in the same direction as the output shaft of the motor. Others indicate rotation in the opposite direction.
* If you are to have less ratio than the ratio in the table, you can install the decimal gearhead, which has one tenth of the ratio, between the gearhead and the motor. In this case, the permissible torque is 5N · m/50kgfcm.
* RPM is based on motor's synchronous rpm (50HZ:1500rpm, 60HZ:1800rpm) and calculated by dividing gear ratio. Actual rpm is 2~20% less than indicating rpm according to load size.

GEARHEADS

CONNECTION DIAGRAMS

Connect Cr circuit for absorbing serge voltage as connection diagram to protect contact point.
Ro = 5 – 200Ω
Co = 0.1 ~ 0.2μF 200WV(400WV)

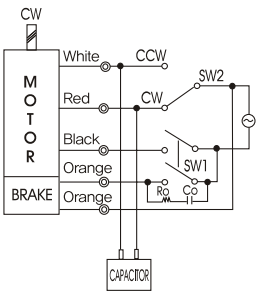

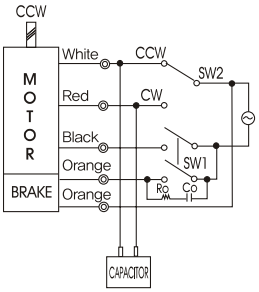

※The direction of motor rotation is as viewed from the front shaft end of the motor

DIMENSIONS

K7G□B(C)

K7RG15N□–B + K7G□B(C)

DECIMAL GEARHEAD

K7G10BX

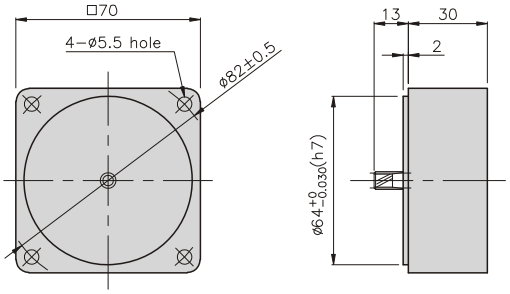

GEARHEAD

K7G□B(C)

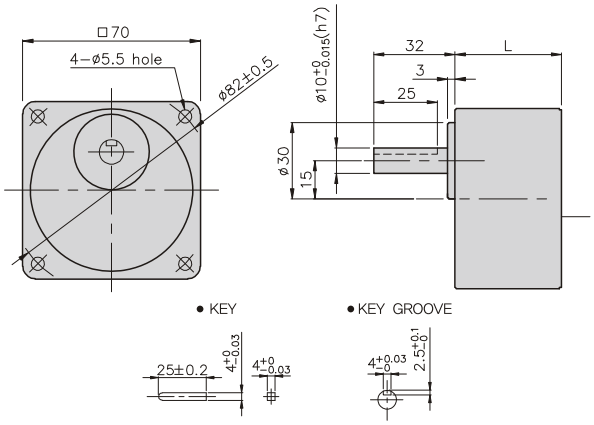

DIMENSION TABLE

PART No	L	Application Model	Mounting BOLT
01	32	K7G3~18B(C)	M4 P0.8 X 50
02	42	K7G20~200B(C)	M4 P0.8 X 65
03	30	K7G10BX	M4 P0.8 X 90

WEIGHT

PART		WEIGHT(kg)
MOTOR		1.30
DECIMAL GEAR HEAD		0.32
GEAR HEAD	K7G3~18B(C)	0.38
	K7G20~40B(C)	0.46
	K7G50~200B(C)	0.51

K7RG15N□–B + K7G□B(C)

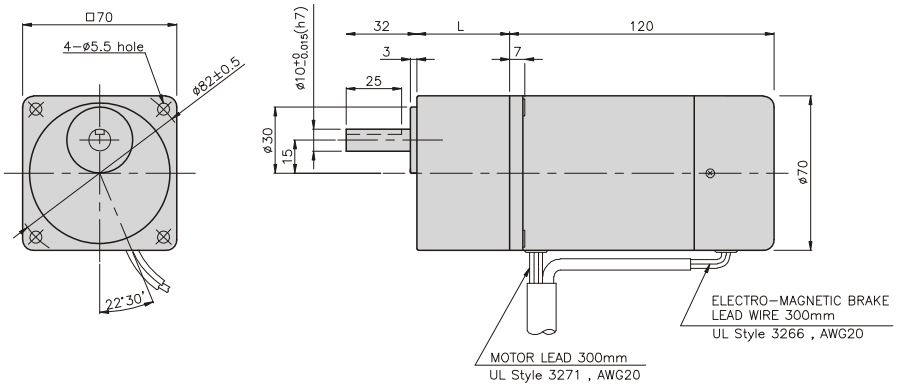

GGM GGM GEARED MOTOR

BRAKE MOTOR

25W □80mm

K8□S25N□–B

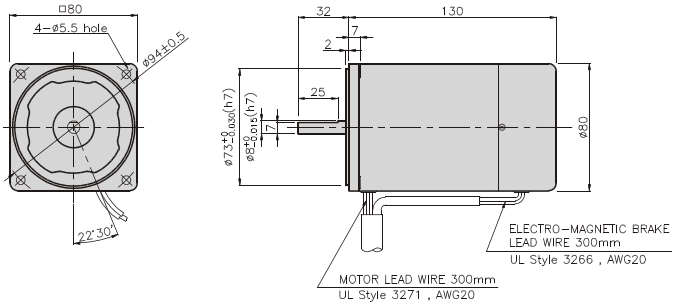

SPECIFICATIONS

25W single–phase : 30 minutes rating, three–phase : continuous rating, four poles

Model		Duty	Voltage (V)	Frequency (Hz)	Current (A)	Start T. (N*m/ Kgf*cm)	Rated T. (N*m/ Kgf*cm)	Speed (rpm)	Condenser (μF)	Friction T. (N*m/ (Kgf*cm)
K8R□25NJ–B	single–phase	30 minutes	100	50	0.65	0.15/1.5	0.195/1.95	1250	10	0.4/4
				60	0.74		0.165/1.65	1500		
K8R□25NU–B			110	60	0.51	0.13/1.3	0.165/1.65	1500	6	0.4/4
			115		0.54					
K8R□25NL–B			200	50	0.33	0.16/1.6	0.195/1.95	1250	2.5	0.4/4
				60	0.37		0.16/1.6	1550		
K8R□25NC–B			220	50	0.29	0.15/1.5	0.195/1.95	1250	2	0.4/4
				60	0.34		0.165/1.65	1500		
			230	50	0.35	0.165/1.65	0.195/1.95	1250		
				60	0.34		0.165/1.65	1500		
K8R□25ND–B			240	50	0.32	0.15/1.5	0.19/1.9	1300	1.5	0.4/4
K8I□25NT–B	three–phase	continuous	200	50	0.27	0.5/5	0.19/1.9	1300	–	0.4/4
				60	0.24	0.4/4	0.16/1.6	1550		
K8I□25NH–B			220	50	0.28	0.6/6	0.185/1.85	1350	–	0.4/4
				60	0.24	0.48/4.8	0.155/1.55	1600		
			230	50	0.29	0.65/6.5	0.185/1.85	1350		
				60	0.25	0.52/5.2	0.155/1.55	1600		
K8I□25NM–B			380	50	0.17	0.6/6	0.19/1.9	1300	–	0.4/4
				60	0.14	0.48/4.8	0.155/1.55	1600		
K8I□25NV–B			400	50	0.17	0.73/7.3	0.19/1.9	1300	–	0.4/4
				60	0.15	0.6/6	0.155/1.55	1600		
K8I□25NQ–B			415	50	0.13	0.55/5.5	0.19/1.9	1300	–	0.4/4
				60	0.11	0.4/4	0.155/1.55	1600		
K8I□25NZ–B			440	50	0.14	0.63/6.3	0.19/1.9	1300	–	0.4/4
				60	0.12	0.5/5	0.155/1.55	1600		

* □ : SHAFT SHAPE (S : STRAIGHT, G : PINION)

RATED TORQUE OF GEARHEAD

● 50Hz

unit = above : N · m / below : kgfcm

Model	Speed(rpm)	500	46	300	250	200	166	150	120	100	83	75	60	50	41	37	30	25	20	16	15	12.5	10	8.3	7.5	6
Motor/ Gearhead	Ratio	3	3.6	5	6	7.5	9	10	12.5	15	18	20	25	30	36	40	50	60	75	90	100	120	150	180	200	250
K8□G25N□–B		0.45	0.54	0.75	0.90	1.12	1.35	1.50	1.87	2.25	2.70	2.70	3.37	4.05	4.86	5.39	6.07	7.28	8	8	8	8	8	8	8	8
K8G□B(C)		4.5	5.4	7.5	9.0	11.2	13.5	15.0	18.7	22.5	27.0	27.0	33.7	40.5	48.6	53.9	60.7	72.8	80	80	80	80	80	80	80	80

● 60Hz

unit = above : N · m / below : kgfcm

Model	Speed(rpm)	600	500	360	300	240	200	180	144	120	100	90	72	60	50	45	36	30	24	20	18	15	12	10	9	7.2
Motor/ Gearhead	Ratio	3	3.6	5	6	7.5	9	10	12.5	15	18	20	25	30	36	40	50	60	75	90	100	120	150	180	200	250
K8□G25N□–B		0.38	0.45	0.63	0.75	0.94	1.13	1.26	1.57	1.88	2.26	2.26	2.82	3.39	4.07	4.52	5.08	6.10	7.63	8	8	8	8	8	8	8
K8G□B(C)		3.8	4.5	6.3	7.5	9.4	11.3	12.6	15.7	18.8	22.6	22.6	28.2	33.9	40.7	45.2	50.8	61.0	76.3	80	80	80	80	80	80	80

* Gearhead and decimal gearhead are sold separately.
* The code in □ of gearhead model is for gear ratio.
* ▬ color indicates that the output shaft of the geared motor rotates in the same direction as the output shaft of the motor. Others indicate rotation in the opposite direction.
* If you are to have less ratio than the ratio in the table, you can install the decimal gearhead, which has one tenth of the ratio, between the gearhead and the motor. In this case, the permissible torque is 8N · m/80kgfcm. But, if you install 1/25~1/40 gearhead, the permissible torque is 6N · m/60kgfcm.
* RPM is based on motor's synchronous rpm (50HZ:1500rpm, 60HZ:1800rpm) and calculated by dividing gear ratio. Actual rpm is 2~20% less than indicating rpm according to load size.

GEARHEADS

CONNECTION DIAGRAMS

single phase motor

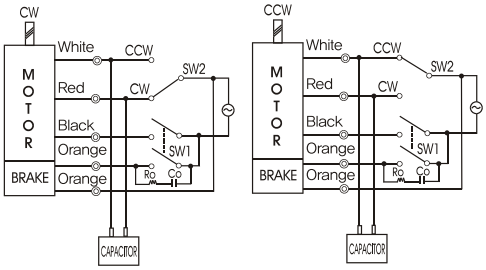

three phase motor

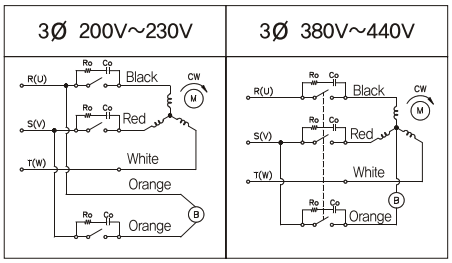

connecting two leadwires of U,V,W in turns

※The direction of motor rotation is as viewed from the front shaft end of the motor

Connect Cr circuit for absorbing serge voltage as connection diagram to protect contact point.
Ro = 5 – 200Ω
Co = 0.1 ~ 0.2μF 200WV(400WV)

DIMENSIONS

K8G□B(C)

K8□G25N□–B + K8G□B(C)

DECIMAL GEARHEAD

K8G10BX

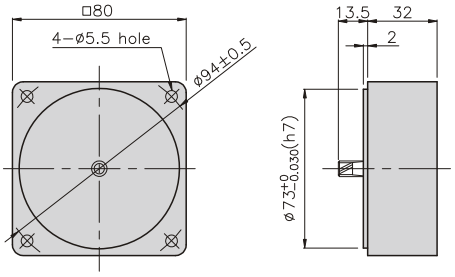

GEARHEAD

K8G□B(C)

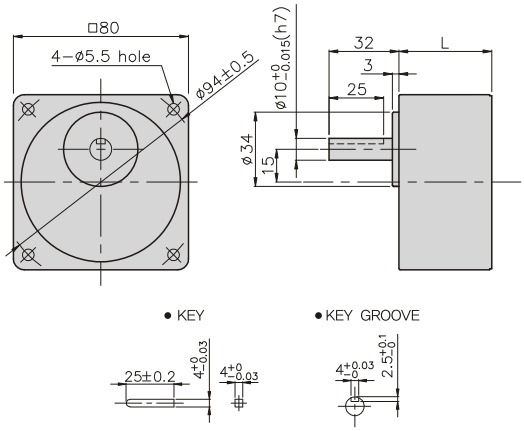

DIMENSION TABLE

PART No	L	Application Model	Mounting BOLT
01	32	K8G3~18B(C)	M4 P0.8 X 50
02	42.5	K8G20~250B(C)	M4 P0.8 X 65
03	32	K8G10BX	M4 P0.8 X 95

WEIGHT

PART		WEIGHT(kg)
MOTOR		1.84
DECIMAL GEAR HEAD		0.46
GEAR HEAD	K8G3~18B(C)	0.51
	K8G20~40B(C)	0.64
	K8G50~250B(C)	0.70

K8□G25N□–B + K8G□B(C)

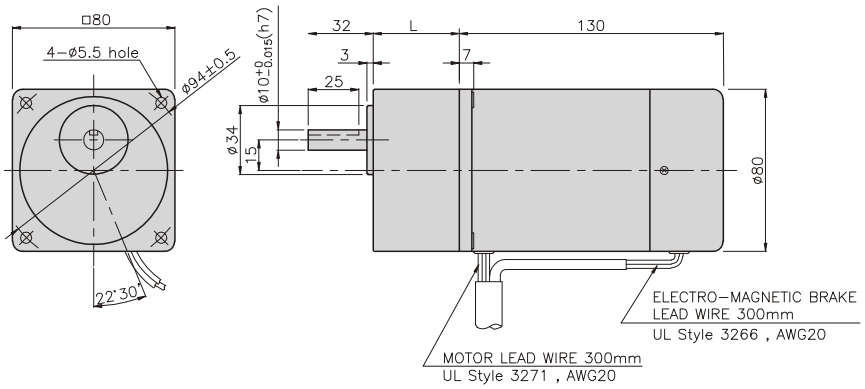

GGM GGM GEARED MOTOR

BRAKE MOTOR

40W □90mm

K9□S40N□–B

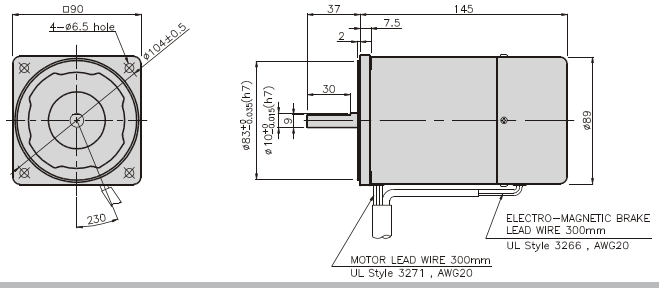

SPECIFICATIONS

40W single–phase : 30 minutes rating, three–phase : continuous rating, four poles

Model		Duty	Voltage (V)	Frequency (Hz)	Current (A)	Start T. (N*m/Kgf*cm)	Rated T. (N*m/Kgf*cm)	Speed (rpm)	Condenser (μF)	Friction T. (N*m/(Kgf*cm)
K9R□40NJ–B	single–phase	30 minutes	100	50	1	0.3/3	0.315/3.15	1250	16	1/10
				60	1.13	0.33/3.3	0.255/2.55	1550		
K9R□40NU–B			110	60	0.8	0.2/2	0.26/2.6	1500	10	1/10
			115		0.83	0.22/2.2				
K9R□40NL–B			200	50	0.45	0.3/3	0.315/3.15	1250	4	1/10
				60	0.57		0.26/2.6	1500		
K9R□40NC–B			220	50	0.46	0.3/3	0.315/3.15	1250	3.5	1/10
				60	0.55	0.32/3.2	0.26/2.6	1500		
			230	50	0.55	0.4/4	0.315/3.15	1250		
				60	0.58	0.36/3.6	0.26/2.6	1500		
K9R□40ND–B			240	50	0.41	0.34/3.4	0.3/3	1300	3	1/10
K9I□40NT–B	three–phase	continuous	200	50	0.39	1/10	0.3/3	1300	–	1/10
				60	0.32	0.78/7.8	0.245/2.45	1600		
K9I□40NH–B			220	50	0.33	0.95/9.5	0.29/2.9	1350	–	1/10
				60	0.31	0.78/7.8	0.245/2.45	1600		
			230	50	0.41	1/10	0.29/2.9	1350		
				60	0.32	0.83/8.3	0.245/2.45	1600		
K9I□40NM–B			380	50	0.18	1/10	0.29/2.9	1350	–	1/10
				60		0.78/7.8	0.245/2.45	1600		
K9I□40NV–B			400	50	0.18	1.15/11.5	0.29/2.9	1350	–	1/10
				60	0.19	0.88/8.8	0.245/2.45	1600		
K9I□40NQ–B			415	50	0.16	0.95/9.5	0.29/2.9	1350	–	1/10
				60	0.14	0.72/7.2	0.245/2.45	1600		
K9I□40NZ–B			440	50	0.19	1/10	0.29/2.9	1350	–	1/10
				60	0.16	0.79/7.9	0.245/2.45	1600		

* □ : SHAFT SHAPE (S : STRAIGHT, G : PINION)

RATED TORQUE OF GEARHEAD

● 50Hz

unit = above : N · m / below : kgfcm

Model	Speed(rpm)	500	416	300	250	200	166	150	120	100	83	75	60	50	41	37	30	25	20	16	15	12.5	10	8.3	7.5
Motor/ Gearhead	Ratio	3	3.6	5	6	7.5	9	10	12.5	15	18	20	25	30	36	40	50	60	75	90	100	120	150	180	200
K9□G40N□–B		0.70	0.85	1.17	1.41	1.76	2.11	2.35	2.94	3.52	4.23	4.23	5.29	6.34	7.61	8.46	10	10	10	10	10	10	10	10	10
K9G□B(C)		7.0	8.5	11.7	14.1	17.6	21.1	23.5	29.4	35.2	42.3	42.3	52.9	63.4	76.1	84.6	100	100	100	100	100	100	100	100	100

● 60Hz

unit = above : N · m / below : kgfcm

Model	Speed(rpm)	600	500	360	300	240	200	180	144	120	100	90	72	60	50	45	36	30	24	20	18	15	12	10	9
Motor/ Gearhead	Ratio	3	3.6	5	6	7.5	9	10	12.5	15	18	20	25	30	36	40	50	60	75	90	100	120	150	180	200
K9□G40N□–B		0.60	0.71	0.99	1.19	1.49	1.79	1.98	2.48	2.98	3.57	3.57	4.47	5.36	6.43	7.14	8.04	10	10	10	10	10	10	10	10
K9G□B(C)		6.0	7.1	9.9	11.9	14.9	17.9	19.8	24.8	29.8	35.7	35.7	44.7	53.6	64.3	71.4	80.4	100	100	100	100	100	100	100	100

* Gearhead and decimal gearhead are sold separately.
* The code in □ of gearhead model is for gear ratio.
* color indicates that the output shaft of the geared motor rotates in the same direction as the output shaft of the motor. Others indicate rotation in the opposite direction.
* If you are to have less ratio than the ratio in the table, you can install the decimal gearhead, which has one tenth of the ratio, between the gearhead and the motor. In this case, the permissible torque is 10N · m/100kgfcm.
* RPM is based on motor's synchronous rpm (50HZ:1500rpm, 60HZ:1800rpm) and calculated by dividing gear ratio. Actual rpm is 2~20% less than indicating rpm according to load size.

GEARHEADS

CONNECTION DIAGRAMS

single phase motor

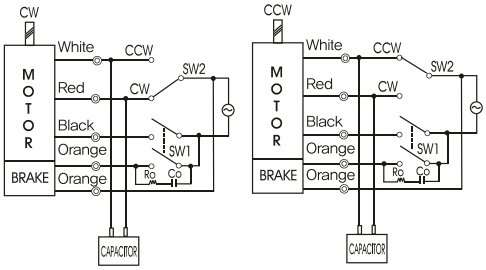

three phase motor

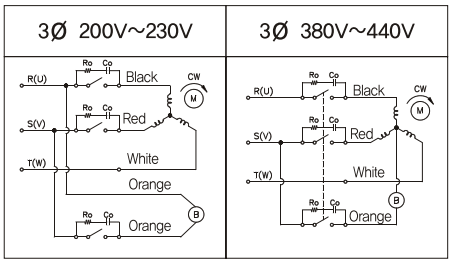

connecting two leadwires of U,V,W in turns

※The direction of motor rotation is as viewed from the front shaft end of the motor

Connect Cr circuit for absorbing serge voltage as connection diagram to protect contact point.
Ro = 5 – 200Ω
Co = 0.1 ~ 0.2μF 200WV(400WV)

DIMENSIONS

K9G□B(C)

K9□G40N□–B + K9G□B(C)

DECIMAL GEARHEAD

K9G10BX

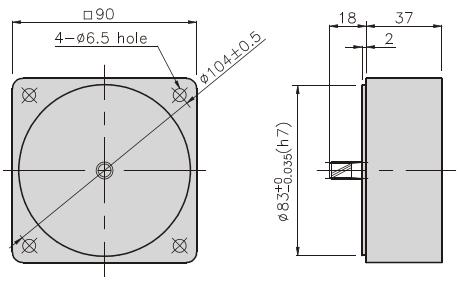

GEARHEAD

K9G□B(C)

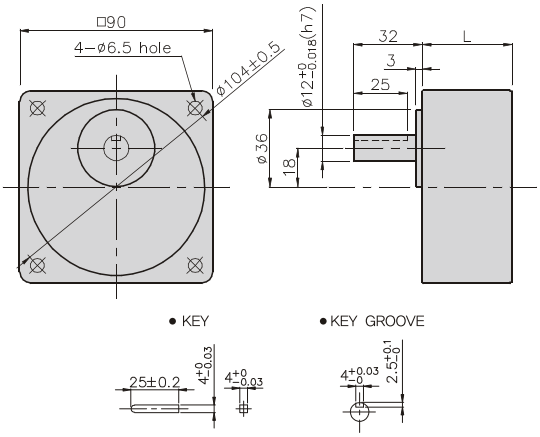

DIMENSION TABLE

PART No	L	Application Model	Mounting BOLT
01	42	K9G3~18B(C)	M6 P1.0 X 65
02	60	K9G20~200B(C)	M6 P1.0 X 80
03	37	K9G10BX	M6 P1.0 X 120

WEIGHT

PART		WEIGHT(kg)
MOTOR		2.86
DECIMAL GEAR HEAD		0.60
GEAR HEAD	K9G3~18B(C)	0.78
	K9G20~40B(C)	1.04
	K9G50~200B(C)	1.14

K9□G40N□–B + K9G□B(C)

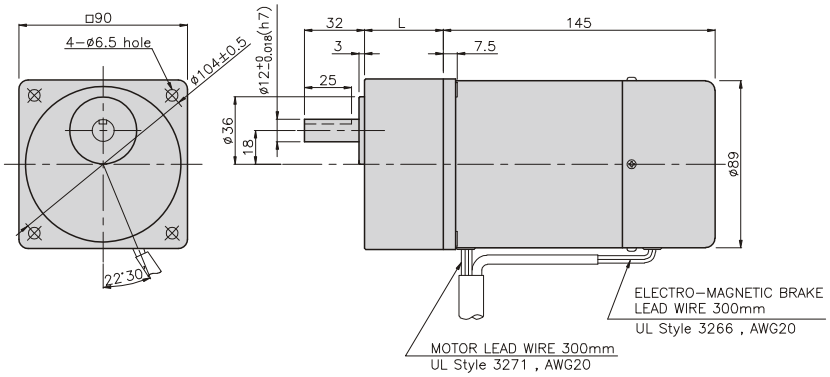

BRAKE MOTOR

GGM GGM GEARED MOTOR

BRAKE MOTOR

60W □90mm

K9□P60F□–B

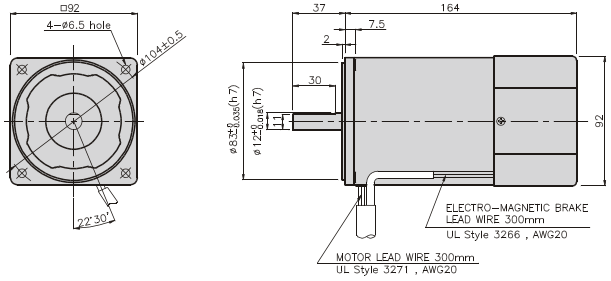

SPECIFICATIONS

60W single–phase : 30 minutes rating, three–phase : continuous rating, four poles

Model		Duty	Voltage (V)	Frequency (Hz)	Current (A)	Start T. (N*m/ Kgf*cm)	Rated T. (N*m/ Kgf*cm)	Speed (rpm)	Condenser (μF)	Friction T. (N*m/ (Kgf*cm)
K9R□60FJ–B	single–phase	30 minutes	100	50	1.48	0.48/4.8	0.47/4.7	1250	25	1/10
				60	1.66		0.38/3.8	1550		
K9R□60FU–B			110	60	1.25	0.4/4	0.38/3.8	1550	17	1/10
			115		1.31	0.425/4.25				
K9R□60FL–B			200	50	0.72	0.5/5	0.47/4.7	1250	6	1/10
				60	0.76	0.44/4.4	0.39/3.9	1500		
K9R□60FC–B			220	50	0.69	0.45/4.5	0.47/4.7	1250	5	1/10
				60	0.76	0.48/4.8	0.38/3.8	1550		
			230	50	0.77	0.5/5	0.47/4.7	1250		
				60	0.79		0.38/3.8	1550		
K9R□60FD–B			240	50	0.75	0.5/5	0.47/4.7	1250	5	1/10
K9I□60FT–B	three–phase	continuous	200	50	0.49	1.35/13.5	0.45/4.5	1300	–	1/10
				60	0.45	1.05/10.5	0.38/3.8	1550		
K9I□60FH–B			220	50	0.55	1.6/16	0.435/4.35	1350	–	1/10
				60	0.47	1.2/12	0.37/3.7	1600		
			230	50	0.6	1.65/16.5	0.435/4.35	1350		
				60	0.52	1.3/13	0.37/3.7	1600		
K9I□60FM–B			380	50	0.34	1.55/15.5	0.435/4.35	1350	–	1/10
				60	0.25	1.19/11.9	0.37/3.7	1600		
K9I□60FV–B			400	50	0.37	1.85/18.5	0.435/4.35	1350	–	1/10
				60	0.28	1.42/14.2	0.37/3.7	1600		
K9I□60FQ–B			415	50	0.26	1.45/14.5	0.45/4.5	1300	–	1/10
				60	0.21	1.15/11.5	0.37/3.7	1600		
K9I□60FZ–B			440	50	0.28	1.6/16	0.45/4.5	1300	–	1/10
				60	0.23	1.25/12.5	0.37/3.7	1600		

* □ : SHAFT SHAPE (S : STRAIGHT, G : PINION)

RATED TORQUE OF GEARHEAD

● 50Hz

unit = above : N · m / below : kgfcm

Model	Speed(rpm)	500	416	300	250	200	166	150	120	100	83	75	60	50	41	37	30	25	20	16	15	12.5	10	8.3	7.5
Motor/ Gearhead	Ratio	3	3.6	5	6	7.5	9	10	12.5	15	18	20	25	30	36	40	50	60	75	90	100	120	150	180	200
K9□60F□–B		1.06	1.27	1.76	2.11	2.64	3.17	3.52	3.96	4.76	5.71	6.34	7.14	8.56	10.27	11.42	14.27	17.12	20	20	20	20	20	20	20
K9P□B, BF		10.6	12.7	17.6	21.1	26.4	31.7	35.2	39.6	47.6	57.1	63.4	71.4	85.6	102.7	114.2	142.7	171.2	200	200	200	200	200	200	200

● 60Hz

unit = above : N · m / below : kgfcm

Model	Speed(rpm)	600	500	360	300	240	200	180	144	120	100	90	72	60	50	45	36	30	24	20	18	15	12	10	9
Motor/ Gearhead	Ratio	3	3.6	5	6	7.5	9	10	12.5	15	18	20	25	30	36	40	50	60	75	90	100	120	150	180	200
K9□60F□–B		0.90	1.08	1.50	1.80	2.25	2.70	3.00	3.37	4.05	4.86	5.39	6.07	7.28	8.74	9.71	12.14	14.57	16.39	19.66	20	20	20	20	20
K9P□B, BF		9.0	10.8	15.0	18.0	22.5	27.0	30.0	33.7	40.5	48.6	53.9	60.7	72.8	87.4	97.1	121.4	145.7	163.9	196.6	200	200	200	200	200

* Gearhead and decimal gearhead are sold separately.
* The code in □ of gearhead model is for gear ratio.
* ▬ color indicates that the output shaft of the geared motor rotates in the same direction as the output shaft of the motor. Others indicate rotation in the opposite direction.
* If you are to have less ratio than the ratio in the table, you can install the decimal gearhead, which has one tenth of the ratio, between the gearhead and the motor. In this case, the permissible torque is 20N · m/200kgfcm.
* RPM is based on motor's synchronous rpm (50HZ:1500rpm, 60HZ:1800rpm) and calculated by dividing gear ratio. Actual rpm is 2~20% less than indicating rpm according to load size.

GEARHEADS

CONNECTION DIAGRAMS

single phase motor

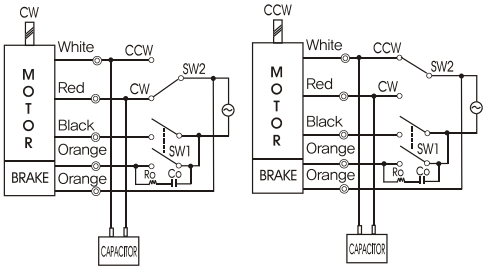

three phase motor

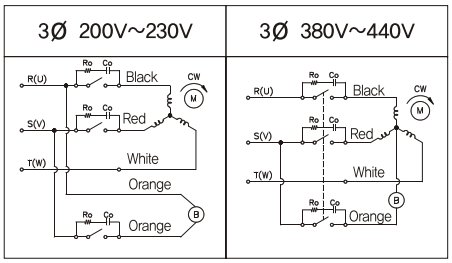

connecting two leadwires of U,V,W in turns

※The direction of motor rotation is as viewed from the front shaft end of the motor

Connect Cr circuit for absorbing serge voltage as connection diagram to protect contact point.
Ro = 5 – 200Ω
Co = 0.1 ~ 0.2μF 200WV(400WV)

DIMENSIONS

K9P□B

K9P□BF

DECIMAL GEARHEAD

K9P10BX

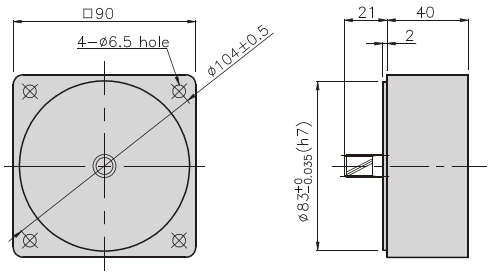

GEARHEAD

K9P□B

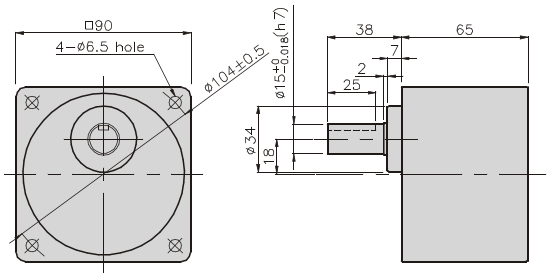

GEARHEAD

K9P□BF

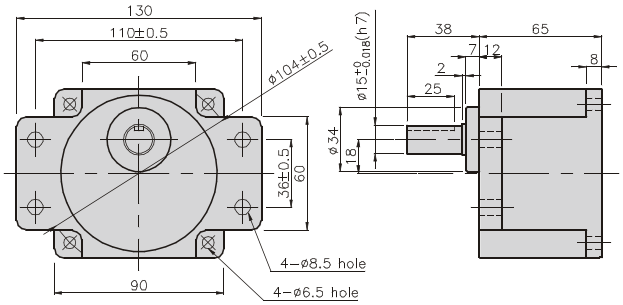

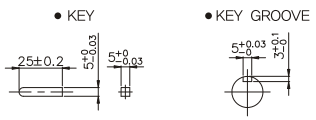

GEARHEADS

DIMENSIONS

K9□P60F□–B + K9P□B

K9□P60F□–B + K9P□BF

K9□P60F□–B + K9P□B

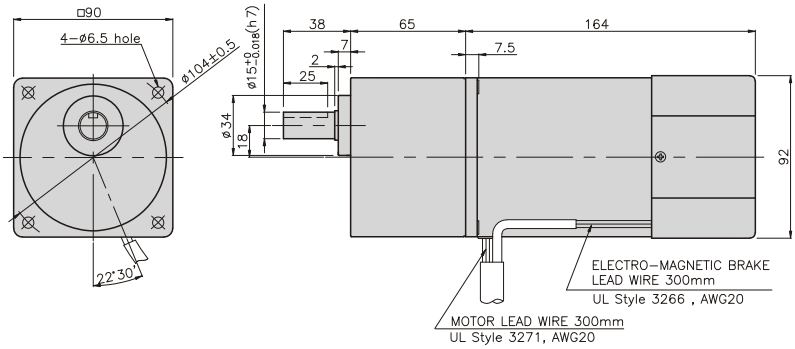

DIMENSION TABLE

PART No	L	Application Model	Mounting BOLT
01	65	K9P3~200B	M6 P1.0 X 25
02	40	K9P10BX	M6 P1.0 X 140

WEIGHT

PART		WEIGHT(kg)
MOTOR		3.08
DECIMAL GEAR HEAD		0.62
GEAR HEAD	K9P3~10B	1.22
	K9P12.5~20B	1.32
	K9P25~60B	1.42
	K9P75~200B	1.45

K9□P60F□–B + K9P□BF

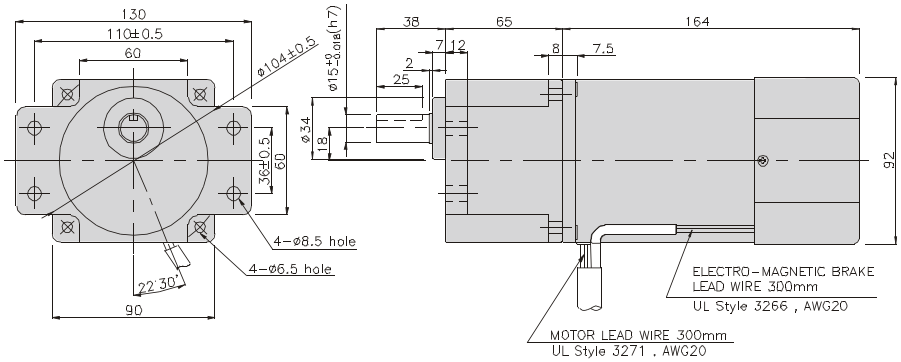

DIMENSION TABLE

PART No	L	Application Model	Mounting BOLT
01	65	K9P3~200BF	M6 P1.0 X 25
02	40	K9P10BX	M6 P1.0 X 65

WEIGHT

PART		WEIGHT(kg)
MOTOR		3.08
DECIMAL GEAR HEAD		0.62
GEAR HEAD	K9P3~10BF	1.22
	K9P12.5~20BF	1.30
	K9P25~60BF	1.42
	K9P75~200BF	1.44

BRAKE MOTOR

90W □90mm

K9□S90F□–B

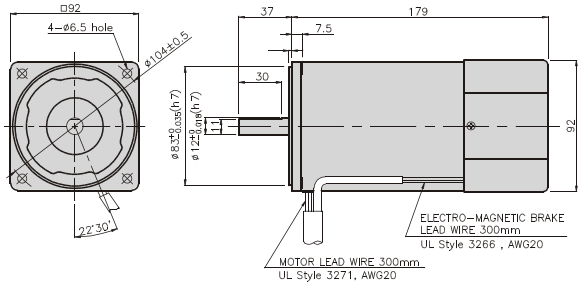

SPECIFICATIONS

90W single–phase : 30 minutes rating, three–phase : continuous rating, four poles

Model		Duty	Voltage (V)	Frequency (Hz)	Current (A)	Start T. (N*m/ Kgf*cm)	Rated T. (N*m/ Kgf*cm)	Speed (rpm)	Condenser (μF)	Friction T. (N*m) (Kgf*cm)
K9R□90FJ–B	single–phase	30 minutes	100	50	2.52	0.6/6	0.705/7.05	1250	35	1/10
				60	2.42		0.57/5.7	1550		
K9R□90FU–B			110	60	1.88	0.55/5.5	0.57/5.7	1550	25	1/10
			115		2.12					
K9R□90FL–B			200	50	0.9	0.55/5.5	0.705/7.05	1250	8	1/10
				60	1.1		0.57/5.7	1550		
K9R□90FC–B			220	50	1	0.5/5	0.705/7.05	1250	7	1/10
				60	1.1	0.53/5.3	0.57/5.7	1550		
			230	50	1.3	0.6/6	0.705/7.05	1250		
				60	1.1		0.57/5.7	1550		
K9R□90FD–B			240	50	0.94	0.55/5.5	0.705/7.05	1250	6	1/10
K9I□90FT–B	three–phase	continuous	200	50	0.79	2.25/22.5	0.65/6.5	1350	–	1/10
				60	0.72	1.75/17.5	0.55/5.5	1600		
K9I□90FH–B			220	50	0.72	2.35/23.5	0.65/6.5	1350	–	1/10
				60	0.63	1.8/18	0.55/5.5	1600		
			230	50	0.86	2.45/24.5	0.65/6.5	1350		
				60	0.66	1.95/19.5	0.55/5.5	1600		
K9I□90FM–B			380	50	0.43	2.35/23.5	0.65/6.5	1350	–	1/10
				60	0.37	1.7/17	0.55/5.5	1600		
K9I□90FV–B			400	50	0.52	2.65/26.5	0.65/6.5	1350	–	1/10
				60	0.45	2.1/21	0.55/5.5	1600		
K9I□90FQ–B			415	50	0.39	2/20	0.68/6.8	1300	–	1/10
				60	0.31	1.5/15	0.55/5.5	1600		
K9I□90FZ–B			440	50	0.45	2.1/21	0.68/6.8	1300	–	1/10
				60	0.39	1.7/17	0.55/5.5	1600		

* □ : SHAFT SHAPE (S : STRAIGHT, G : PINION)

RATED TORQUE OF GEARHEAD

● 50Hz

unit = above : N · m / below : kgfcm

Model	Speed(rpm)	500	416	300	250	200	166	150	120	100	83	75	60	50	41	37	30	25	20	16	15	12.5	10	8.3	7.5
Motor/ Gearhead	Ratio	3	3.6	5	6	7.5	9	10	12.5	15	18	20	25	30	36	40	50	60	75	90	100	120	150	180	200
K9□P90F□–B		1.58	1.90	2.63	3.16	3.95	4.74	5.27	5.92	7.11	8.53	9.48	10.66	12.79	15.35	17.06	20	20	20	20	20	20	20	20	20
K9P□B, BF		15.8	19.0	26.3	31.6	39.5	47.4	52.7	59.2	71.1	85.3	94.8	106.6	127.9	153.5	170.6	200	200	200	200	200	200	200	200	200

● 60Hz

unit = above : N · m / below : kgfcm

Model	Speed(rpm)	600	500	360	300	240	200	180	144	120	100	90	72	60	50	45	36	30	24	20	18	15	12	10	9
Motor/ Gearhead	Ratio	3	3.6	5	6	7.5	9	10	12.5	15	18	20	25	30	36	40	50	60	75	90	100	120	150	180	200
K9□P90F□–B		1.34	1.60	2.23	2.67	3.34	4.01	4.46	5.01	6.01	7.22	8.02	9.02	10.83	12.99	14.43	18.0	20	20	20	20	20	20	20	20
K9P□B, BF		13.4	16.0	22.3	26.7	33.4	40.1	44.6	50.1	60.1	72.2	80.2	90.2	108.3	129.9	144.3	180	200	200	200	200	200	200	200	200

* Gearhead and decimal gearhead are sold separately.
* The code in □ of gearhead model is for gear ratio.
* ▬ color indicates that the output shaft of the geared motor rotates in the same direction as the output shaft of the motor. Others indicate rotation in the opposite direction.
* If you are to have less ratio than the ratio in the table, you can install the decimal gearhead, which has one tenth of the ratio, between the gearhead and the motor. In this case, the permissible torque is 20N · m/200kgfcm.
* RPM is based on motor's synchronous rpm (50HZ:1500rpm, 60HZ:1800rpm) and calculated by dividing gear ratio. Actual rpm is 2~20% less than indicating rpm according to load size.

GEARHEADS

RATED TORQUE OF GEARHEAD

● 50Hz

unit = above : N · m / below : kgfcm

Model	Speed(rpm)	500	416	300	250	200	166	150	120	100	82	75	60	50	41	37	30	25	20	16	15	13	10	8.3	7.5
Motor/ Gearhead	Ratio	3	3.6	5	6	7.5	9	10	12.5	15	18	20	25	30	36	40	50	60	75	90	100	120	150	180	200
K9□P90F□–B		1.58	1.90	2.63	3.16	3.95	4.74	5.27	5.92	7.11	8.53	9.48	10.66	12.79	15.35	17.06	21.32	25.59	30	30	30	30	30	30	30
K9P□BU, BUF		15.8	19.0	26.3	31.6	39.5	47.4	52.7	59.2	71.1	85.3	94.8	106.6	127.9	153.5	170.6	213.2	255.9	300	300	300	300	300	300	300

● 60Hz

unit = above : N · m / below : kgfcm

Model	Speed(rpm)	600	500	360	300	240	200	180	144	120	100	90	72	60	50	45	36	30	24	20	18	15	12	10	9
Motor/ Gearhead	Ratio	3	3.6	5	6	7.5	9	10	12.5	15	18	20	25	30	36	40	50	60	75	90	100	120	150	180	200
K9□P90F□–B		1.34	1.60	2.23	2.67	3.34	4.01	4.46	5.01	6.01	7.22	8.02	9.02	10.83	12.99	14.43	18.04	21.65	24.36	30	30	30	30	30	30
K9P□BU, BUF		13.4	16.0	22.3	26.7	33.4	40.1	44.6	50.1	60.1	72.2	80.2	90.2	108.3	129.9	144.3	180.4	216.5	243.6	300	300	300	300	300	300

* Gearhead and decimal gearhead are sold separately.
* The code in □ of gearhead model is for gear ratio.
* ▬ color indicates that the output shaft of the geared motor rotates in the same direction as the output shaft of the motor. Others indicate rotation in the opposite direction.
* If you are to have less ratio than the ratio in the table, you can install the decimal gearhead, which has one tenth of the ratio, between the gearhead and the motor. In this case, the permissible torque is 30N · m/300kgfcm.
* RPM is based on motor's synchronous rpm (50HZ:1500rpm, 60HZ:1800rpm) and calculated by dividing gear ratio. Actual rpm is 2~20% less than indicating rpm according to load size.

CONNECTION DIAGRAMS

single phase motor

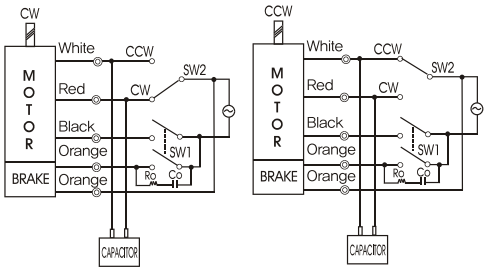

three phase motor

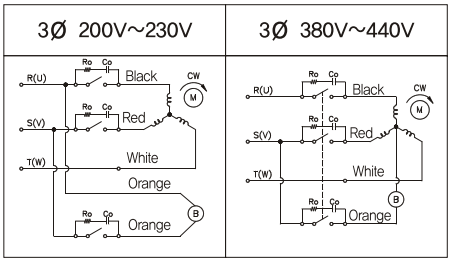

connecting two leadwires of U,V,W in turns

※The direction of motor rotation is as viewed from the front shaft end of the motor

Connect Cr circuit for absorbing serge voltage as connection diagram to protect contact point.
Ro = 5 – 200Ω
Co = 0.1 ~ 0.2μF 200WV(400WV)

GEARHEADS

DIMENSIONS

K9P□B

K9P□BF, BUF

K9P□BU

DECIMAL GEARHEAD

K9P10BX

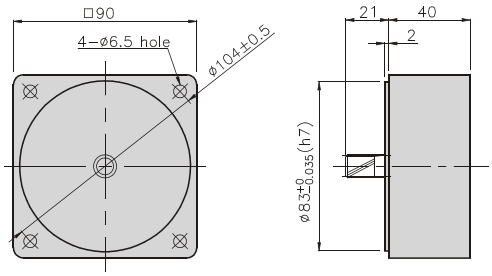

GEARHEAD

K9P□B

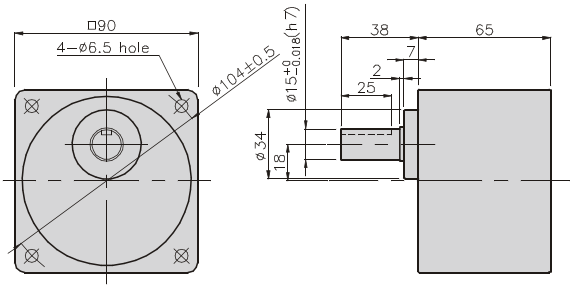

GEARHEAD

K9P□BF

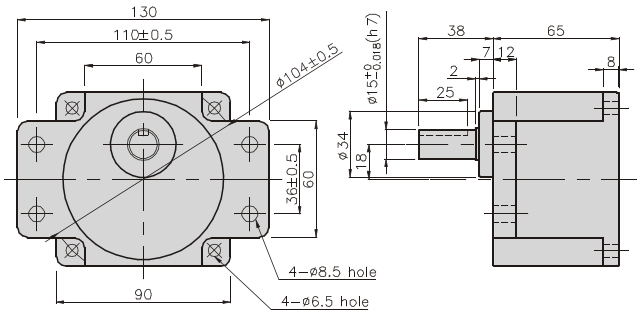

GEARHEAD

K9P□BU

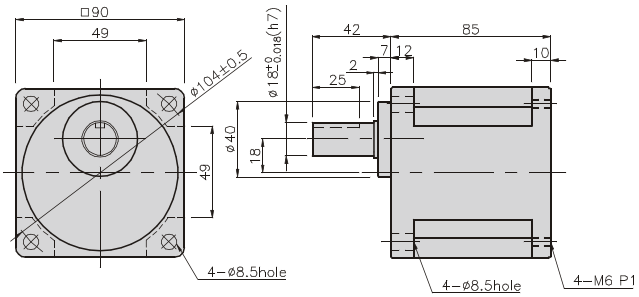

GEARHEAD

K9P□BUF

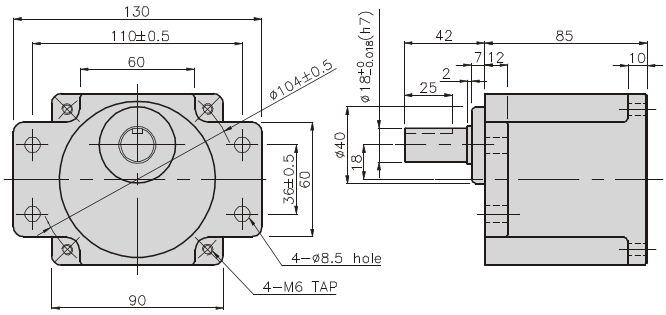

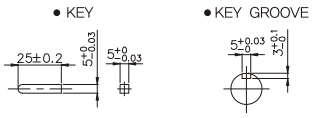

BRAKE MOTOR

GEARHEADS

DIMENSIONS

K9□P90F□–B + K9P□B

K9□P90F–B + K9P□BF, BUF

K9□P90F□–B + K9P□BU

K9□P90F□–B + K9P□B

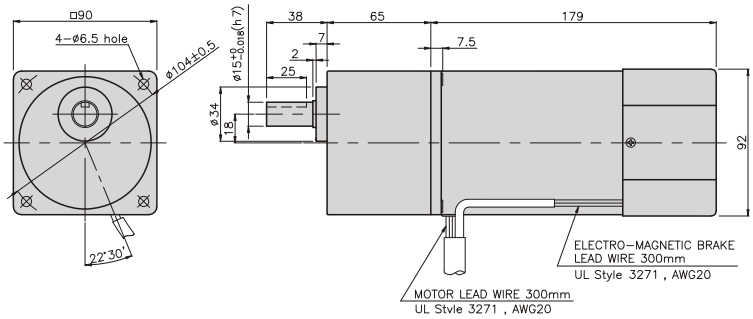

K9□P90F–B + K9P□BF

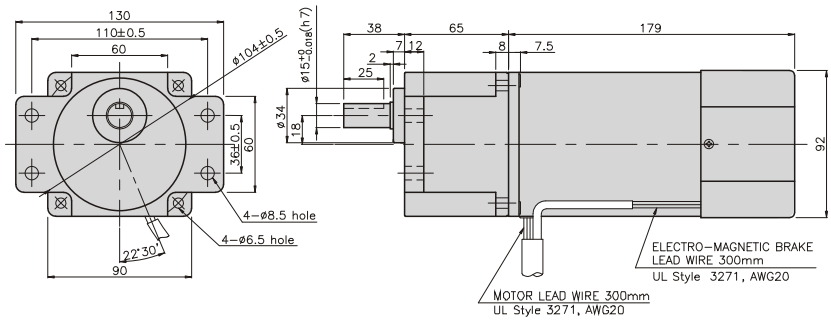

K9□P90F□–B + K9P□BU

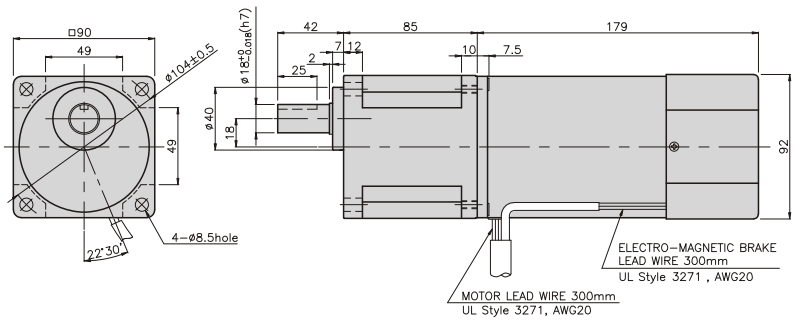

K9□P90F□–B + K9P□BUF

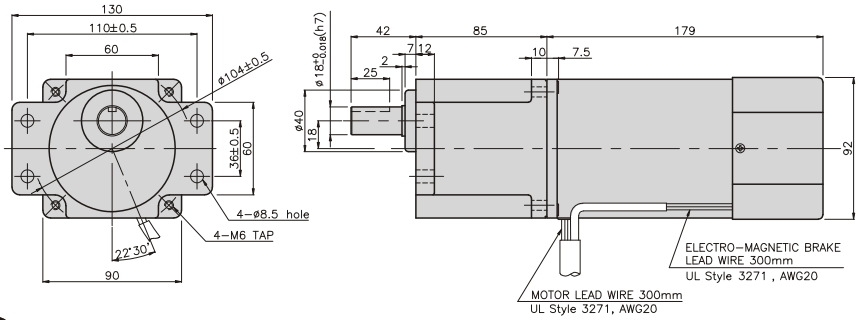

WEIGHT

PART	WEIGHT(kg)
MOTOR	3.60
DECIMAL GEAR HEAD	0.62

DIMENSION TABLE

PART No	L	Application Model	Mounting BOLT
01	65	K9P3~200B	M6 P1.0 X 95
02	40	K9P10BX	M6 P1.0 X 140

WEIGHT

PART	WEIGHT(kg)
K9P3~10B	1.22
K9P12.5~20B	1.32
K9P25~60B	1.42
K9P75~200B	1.45

DIMENSION TABLE

PART No	L	Application Model	Mounting BOLT
01	65	K9P3~200BF	M6 P1.0 X 25
02	40	K9P10BX	M6 P1.0 X 65

WEIGHT

PART	WEIGHT(kg)
K9P3~10BF	1.22
K9P12.5~20BF	1.30
K9P25~60BF	1.42
K9P75~200BF	1.44

DIMENSION TABLE

PART No	L	Application Model	Mounting BOLT
01	85	K9P3~200BU	M6 P1.0 X 20
02	40	K9P10BX	M6 P1.0 X 60

WEIGHT

PART	WEIGHT(kg)
K9P3~10BU	1.44
K9P12.5~20BU	1.55
K9P25~60BU	1.69
K9P75~200BU	1.74

DIMENSION TABLE

PART No	L	Application Model	Mounting BOLT
01	85	K9P3~200BUF	M6 P1.0 X 20
02	40	K9P10BX	M6 P1.0 X 65

WEIGHT

PART	WEIGHT(kg)
K9P3~10BUF	1.50
K9P12.5~20BUF	1.62
K9P25~60BUF	1.76
K9P75~200BUF	1.82

BRAKE MOTOR

120W □90mm

K9□S120F□–B

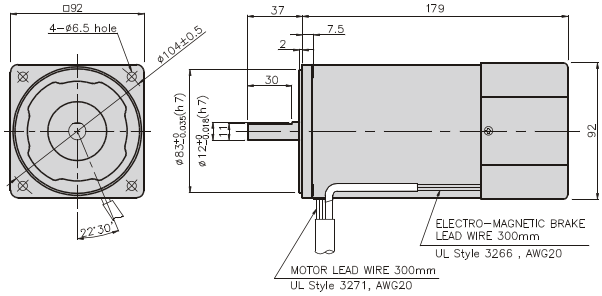

SPECIFICATIONS

120W 30 minutes rating, four poles

Model		Duty	Voltage (V)	Frequency (Hz)	Current (A)	Start T. (N*m/ Kgf*cm)	Rated T. (N*m/ Kgf*cm)	Speed (rpm)	Condenser (μF)	Friction T. (N*m/ (Kgf*cm)
K9R□120FJ–B	single–phase	30 minutes	100	50	2.4	0.65/6.5	0.9/9	1300	40	1/10
				60	2.61	0.7/7	0.755/7.55	1550		
K9R□120FU–B			110	60	1.93	0.6/6	0.755/7.55	1550	25	1/10
			115		1.88	0.62/6.2				
K9R□120FL–B			200	50	1.07	0.6/6	0.9/9	1300	8.5	1/10
				60	1.22	0.58/5.8	0.755/7.55	1550	8	
K9R□120FC–B			220	50	0.82	0.53/5.3	0.9/9	1300	6	1/10
			230		0.85	0.58/5.8				
			220	60	1	0.63/6.3	0.735/7.35	1600	7	
			230		1.1					
K9R□120FD–B			240	50	0.9	0.58/5.8	0.9/9	1300	6	1/10

* □ : SHAFT SHAPE (S : STRAIGHT, G : PINION)

RATED TORQUE OF GEARHEAD

● 50Hz

unit = above : N · m / below : kgfcm

Model	Speed(rpm)	500	416	300	250	200	166	150	120	100	83	75	60	50	41	37	30	25	20	16	15	13	10	8.3	7.5
Motor/ Gearhead	Ratio	3	3.6	5	6	7.5	9	10	12.5	15	18	20	25	30	36	40	50	60	75	90	100	120	150	180	200
K9RP120F□–B K9P□B, BF		2.19	2.62	3.65	4.37	5.47	6.56	7.29	8.20	9.84	11.81	13.12	14.76	17.71	20	20	20	20	20	20	20	20	20	20	20
		21.9	26.2	36.5	43.7	54.7	65.6	72.9	82.0	98.4	118.1	131.2	147.6	177.1	200	200	200	200	200	200	200	200	200	200	200

● 60Hz

unit = above : N · m / below : kgfcm

Model	Speed(rpm)	600	500	360	300	240	200	180	144	120	100	90	72	60	50	45	36	30	24	20	18	15	12	10	9
Motor/ Gearhead	Ratio	3	3.6	5	6	7.5	9	10	12.5	15	18	20	25	30	36	40	50	60	75	90	100	120	150	180	200
K9RP120F□–B K9P□B, BF		1.79	2.14	2.98	3.57	4.47	5.36	5.95	6.70	8.04	9.64	10.72	12.06	14.47	17.36	19.29	20	20	20	20	20	20	20	20	20
		17.9	21.4	29.8	35.7	44.7	53.6	59.5	67.0	80.4	96.41	107.2	120.6	144.7	173.6	192.9	200	200	200	200	200	200	200	200	200

* Gearhead and decimal gearhead are sold separately.
* The code in □ of gearhead model is for gear ratio.
* ▬ color indicates that the output shaft of the geared motor rotates in the same direction as the output shaft of the motor. Others indicate rotation in the opposite direction.
* If you are to have less ratio than the ratio in the table, you can install the decimal gearhead, which has one tenth of the ratio, between the gearhead and the motor. In this case, the permissible torque is 20N · m/200kgfcm.
* RPM is based on motor's synchronous rpm (50HZ:1500rpm, 60HZ:1800rpm) and calculated by dividing gear ratio. Actual rpm is 2~20% less than indicating rpm according to load size.

GEARHEADS

RATED TORQUE OF GEARHEAD

● 50Hz

unit = above : N · m / below : kgfcm

Model	Speed(rpm)	500	416	300	250	200	166	150	120	100	83	75	60	50	41	37	30	25	20	16	15	13	10	8.3	7.5
Motor/ Gearhead	Ratio	3	3.6	5	6	7.5	9	10	12.5	15	18	20	25	30	36	40	50	60	75	90	100	120	150	180	200
K9RP120F□–B		2.19	2.62	3.65	4.37	5.47	6.56	7.29	8.20	9.84	11.81	13.12	14.76	17.71	21.26	23.62	30	30	30	30	30	30	30	30	30
K9P□BU, BUF		21.9	26.2	36.5	43.7	54.7	65.6	72.9	82.0	98.4	118.2	131.2	147.6	177.1	212.6	236.2	300	300	300	300	300	300	300	300	300

● 60Hz

unit = above : N · m / below : kgfcm

Model	Speed(rpm)	600	500	360	300	240	200	180	144	120	100	90	72	60	50	45	36	30	24	20	18	15	12	10	9
Motor/ Gearhead	Ratio	3	3.6	5	6	7.5	9	10	12.5	15	18	20	25	30	36	40	50	60	75	90	100	120	150	180	200
K9RP120F□–B		1.79	2.14	2.98	3.57	4.47	5.36	5.95	6.70	8.04	9.64	10.72	12.06	14.47	17.36	19.29	24.11	28.93	30	30	30	30	30	30	30
K9P□BU, BUF		17.9	21.4	29.8	35.7	44.7	53.6	59.5	67.0	80.4	96.4	107.2	120.6	144.7	173.6	192.9	241.1	289.3	300	300	300	300	300	300	300

* Gearhead and decimal gearhead are sold separately.
* The code in □ of gearhead model is for gear ratio.
* ▬ color indicates that the output shaft of the geared motor rotates in the same direction as the output shaft of the motor. Others indicate rotation in the opposite direction.
* If you are to have less ratio than the ratio in the table, you can install the decimal gearhead, which has one tenth of the ratio, between the gearhead and the motor. In this case, the permissible torque is 30N · m/300kgfcm.
* RPM is based on motor's synchronous rpm (50HZ:1500rpm, 60HZ:1800rpm) and calculated by dividing gear ratio. Actual rpm is 2~20% less than indicating rpm according to load size.

CONNECTION DIAGRAMS

Connect Cr circuit for absorbing serge voltage as connection diagram to protect contact point.
Ro = 5 – 200Ω
Co = 0.1 ~ 0.2μF 200WV(400WV)

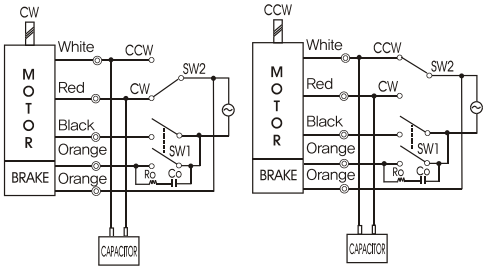

DIMENSION TABLE

PART No	M	Application Model
01	200	50Hz
02	179	60Hz

※The direction of motor rotation is as viewed from the front shaft end of the motor

GEARHEADS

DIMENSIONS

K9P□B

K9P□BF, BUF

K9P□BU

DECIMAL GEARHEAD

K9P10BX

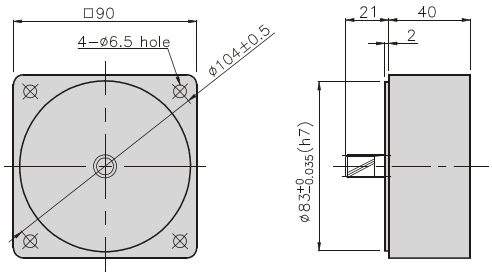

GEARHEAD

K9P□B

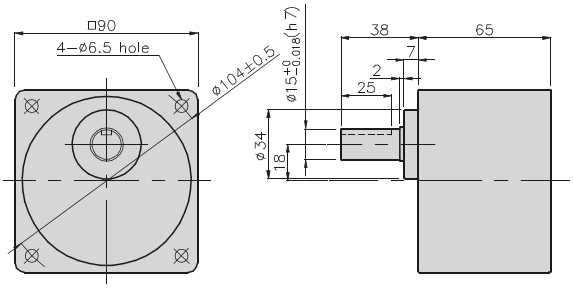

GEARHEAD

K9P□BF

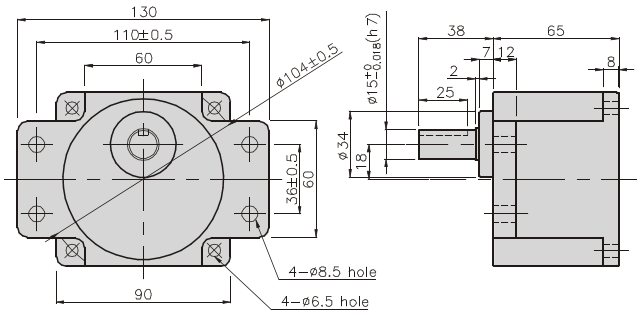

GEARHEAD

K9P□BU

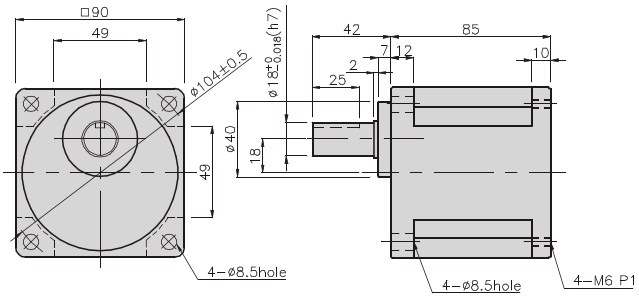

GEARHEAD

K9P□BUF

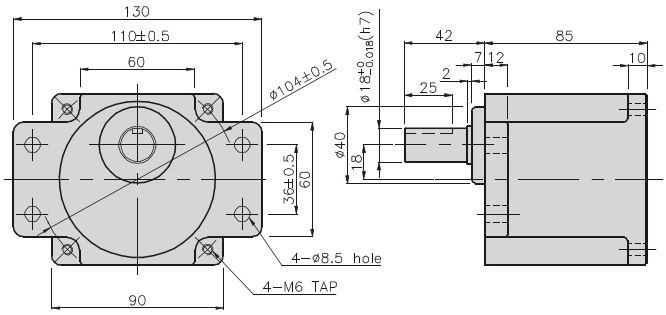

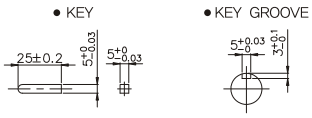

BRAKE MOTOR

GEARHEADS

DIMENSIONS

K9□P120F□–B + K9P□B

K9□P120F□–B + K9P□BF, BUF

K9□P120F□–B + K9P□BU

K9P120F□–B + K9P□B

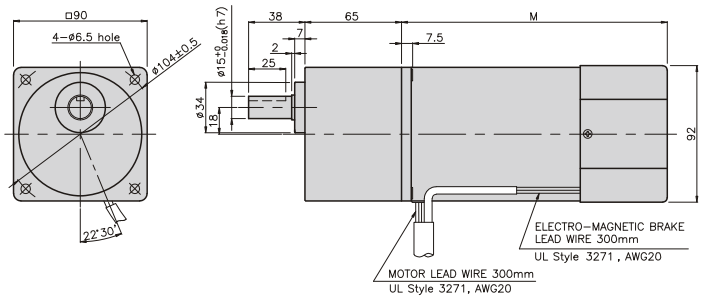

WEIGHT

PART	WEIGHT(kg)
MOTOR	3.20
DECIMAL GEAR HEAD	0.62

DIMENSION TABLE

PART No	M	Application Model
01	155	50Hz
02	135	60Hz

DIMENSION TABLE

PART No	L	Application Model	Mounting BOLT
01	65	K9P3~200B	M6 P1.0 X 95
02	40	K9P10BX	M6 P1.0 X 140

K9□P120F□–B + K9P□BF

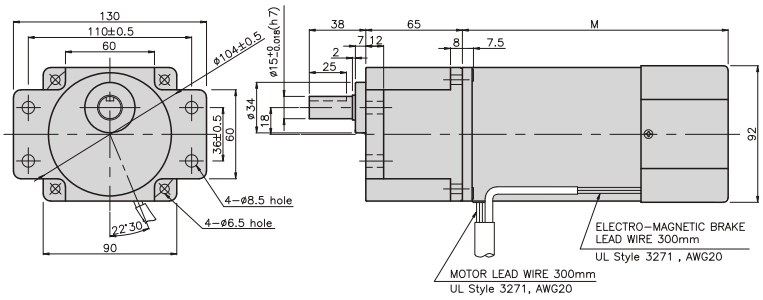

WEIGHT

PART	WEIGHT(kg)
K9P3~10B	1.22
K9P12.5~20B	1.32
K9P25~60B	1.42
K9P75~200B	1.45

DIMENSION TABLE

PART No	L	Application Model	Mounting BOLT
01	65	K9P3~200BF	M6 P1.0 X 25
02	40	K9P10BX	M6 P1.0 X 65

K9□P120F□–B + K9P□BU

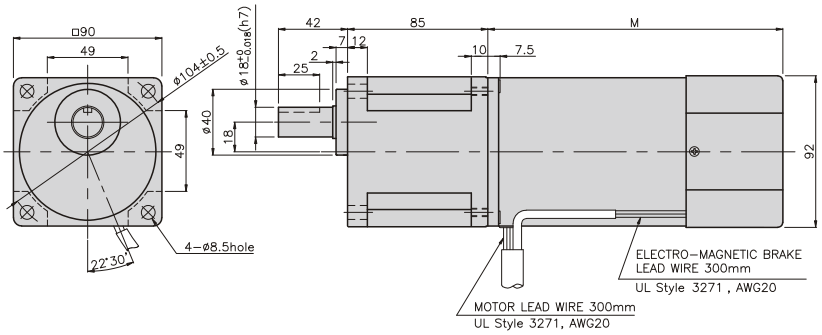

WEIGHT

PART	WEIGHT(kg)
K9P3~10BF	1.22
K9P12.5~20BF	1.30
K9P25~60BF	1.42
K9P75~200BF	1.44

DIMENSION TABLE

PART No	L	Application Model	Mounting BOLT
01	85	K9P3~200BU	M6 P1.0 X 20
02	40	K9P10BX	M6 P1.0 X 60

K9P120F□–B + K9P□BUF

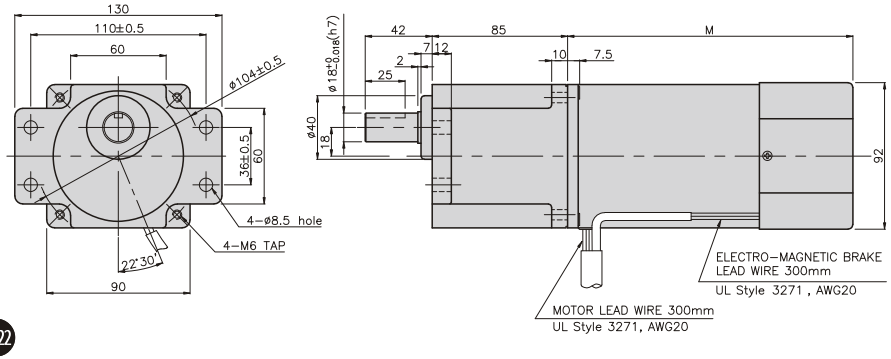

WEIGHT

PART	WEIGHT(kg)
K9P3~10BU	1.44
K9P12.5~20BU	1.55
K9P25~60BU	1.69
K9P75~200BU	1.74

DIMENSION TABLE

PART No	L	Application Model	Mounting BOLT
01	85	K9P3~200BUF	M6 P1.0 X 20
02	40	K9P10BX	M6 P1.0 X 65

WEIGHT

PART	WEIGHT(kg)
K9P3~10BUF	1.50
K9P12.5~20BUF	1.62
K9P25~60BUF	1.76
K9P75~200BUF	1.82

GGM GGM GEARED MOTOR

BRAKE MOTOR

150W □90mm

K9□S150F□–B

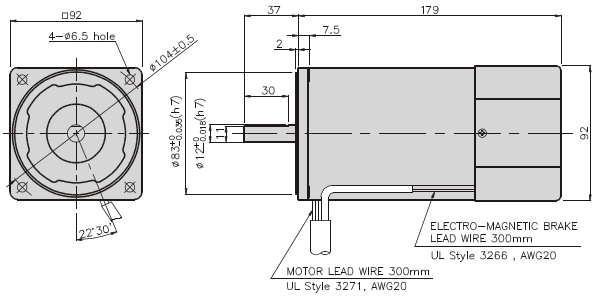

SPECIFICATIONS

150W continuous rating, four poles

Model		Duty	Voltage (V)	Frequency (Hz)	Current (A)	Start T. (N*m/ Kgf*cm)	Rated T. (N*m/ Kgf*cm)	Speed (rpm)	Condenser (μF)	Friction T. (N*m/ (Kgf*cm)
K9I□150FT–B	single–phase	30 minutes	200	50	1.2	3.5/35	1.13/11.3	1300	–	1/10
				60	0.95	2.65/26.5	0.915/9.15	1600		
K9I□150FH–B			220	50	0.99	2.95/29.5	1.13/11.3	1300	–	1/10
			230		1.1	3/30				
			220	60	0.97	2.5/25	0.915/9.15	1600	–	
			230		1.02	2.7/27				
K9I□150FM–B			380	50	0.57	3/30	1.13/11.3	1300	–	1/10
				60		2.25/22.5	0.915/9.15	1600		
K9I□150FV–B			400	50	0.6	3.5/35	1.13/11.3	1300	–	1/10
				60		2.5/25	0.915/9.15	1600		
K9I□150FQ–B			415	50	0.57	3.15/31.5	1.13/11.3	1300	–	1/10
				60	0.42	2.35/23.5	0.915/9.15	1600		
K9I□150FZ–B			440	50	0.53	3.3/33	1.085/10.82	1350	–	1/10
				60	0.44	2.6/26	0.915/9.15	1600		

* □ : SHAFT SHAPE (S : STRAIGHT, G : PINION)

RATED TORQUE OF GEARHEAD

● 50Hz

unit = above : N · m / below : kgfcm

Model	Speed(rpm)	500	416	300	250	200	166	150	120	100	83	75	60	50	41	37	30	25	20	16	15	13	10	8.3	7.5
Motor/ Gearhead	Ratio	3	3.6	5	6	7.5	9	10	12.5	15	18	20	25	30	36	40	50	60	75	90	100	120	150	180	200
K9IP150F□–B		2.64	3.16	4.39	5.27	6.59	7.91	8.79	9.89	11.86	14.24	15.82	17.80	20	20	20	20	20	20	20	20	20	20	20	20
K9P□B, BF		26.4	31.6	43.9	52.7	65.9	79.1	87.9	98.9	118.6	142.4	158.2	178.0	200	200	200	200	200	200	200	200	200	200	200	200

● 60Hz

unit = above : N · m / below : kgfcm

Model	Speed(rpm)	600	500	360	300	240	200	180	144	120	100	90	72	60	50	45	36	30	24	20	18	15	12	10	9
Motor/ Gearhead	Ratio	3	3.6	5	6	7.5	9	10	12.5	15	18	20	25	30	36	40	50	60	75	90	100	120	150	180	200
K9IP150F□–B		2.22	2.67	3.71	4.45	5.56	6.67	7.41	8.34	10.01	12.01	13.34	15.01	18.01	20	20	20	20	20	20	20	20	20	20	20
K9P□B, BF		22.2	26.7	37.1	44.5	55.6	66.7	74.1	83.4	100.1	120.1	133.4	150.1	180.1	200	200	200	200	200	200	200	200	200	200	200

* Gearhead and decimal gearhead are sold separately.
* The code in □ of gearhead model is for gear ratio.
* ▬ color indicates that the output shaft of the geared motor rotates in the same direction as the output shaft of the motor. Others indicate rotation in the opposite direction.
* If you are to have less ratio than the ratio in the table, you can install the decimal gearhead, which has one tenth of the ratio, between the gearhead and the motor. In this case, the permissible torque is 20N · m/200kgfcm.
* RPM is based on motor's synchronous rpm (50HZ:1500rpm, 60HZ:1800rpm) and calculated by dividing gear ratio. Actual rpm is 2~20% less than indicating rpm according to load size.

GEARHEADS

RATED TORQUE OF GEARHEAD

● 50Hz

unit = above : N · m / below : kgfcm

Model	Speed(rpm)	500	416	300	250	200	166	150	120	100	83	75	60	50	41	37	30	25	20	16	15	13	10	8.3	7.5
Motor/ Gearhead	Ratio	3	3.6	5	6	7.5	9	10	12.5	15	18	20	25	30	36	40	50	60	75	90	100	120	150	180	200
K9IP150F□-B		2.64	3.16	4.39	5.27	6.59	7.91	8.79	9.89	11.86	14.24	15.82	17.80	21.36	25.63	28.47	30	30	30	30	30	30	30	30	30
K9P□BU, BUF		26.4	31.6	43.9	52.7	65.9	79.1	87.9	98.9	118.6	142.4	158.2	178.0	213.6	256.3	284.7	300	300	300	300	300	300	300	300	300

● 60Hz

unit = above : N · m / below : kgfcm

Model	Speed(rpm)	600	500	360	300	240	200	180	144	120	100	90	72	60	50	45	36	30	24	20	18	15	12	10	9
Motor/ Gearhead	Ratio	3	3.6	5	6	7.5	9	10	12.5	15	18	20	25	30	36	40	50	60	75	90	100	120	150	180	200
K9IP150F□-B		2.22	2.67	3.71	4.45	5.56	6.67	7.41	8.34	10.01	12.01	13.34	15.01	18.01	21.61	24.01	30	30	30	30	30	30	30	30	30
K9P□BU, BUF		22.2	26.7	37.1	44.5	55.6	66.7	74.1	83.4	100.1	120.1	133.4	150.1	180.1	216.1	240.1	300	300	300	300	300	300	300	300	300

* Gearhead and decimal gearhead are sold separately.
* The code in □ of gearhead model is for gear ratio.
* ▬ color indicates that the output shaft of the geared motor rotates in the same direction as the output shaft of the motor. Others indicate rotation in the opposite direction.
* If you are to have less ratio than the ratio in the table, you can install the decimal gearhead, which has one tenth of the ratio, between the gearhead and the motor. In this case, the permissible torque is 30N · m/300kgfcm.
* RPM is based on motor's synchronous rpm (50HZ:1500rpm, 60HZ:1800rpm) and calculated by dividing gear ratio. Actual rpm is 2~20% less than indicating rpm according to load size.

CONNECTION DIAGRAMS

Connect Cr circuit for absorbing serge voltage as connection diagram to protect contact point.
Ro = 5 – 200Ω
Co = 0.1 ~ 0.2μF 200WV(400WV)

three phase motor

3Ø 200V~230V	3Ø 380V~440V
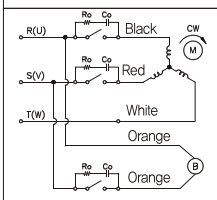	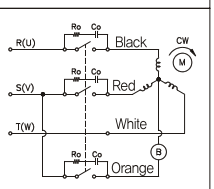

DIMENSION TABLE

PART No	M	Application Model
01	200	50Hz
02	179	60Hz

※The direction of motor rotation is as viewed from the front shaft end of the motor

connecting two leadwires of U,V,W in turns

GEARHEADS

DIMENSIONS

K9P□B

K9P□BF, BUF

K9P□BU

DECIMAL GEARHEAD

K9P10BX

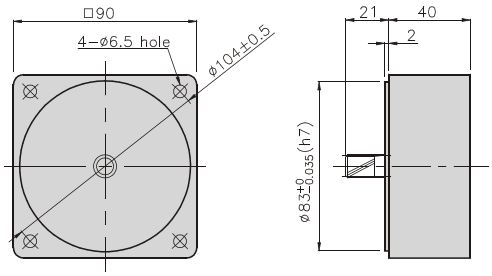

GEARHEAD

K9P□B

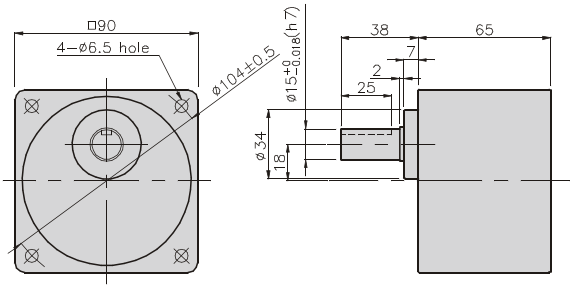

GEARHEAD

K9P□BF

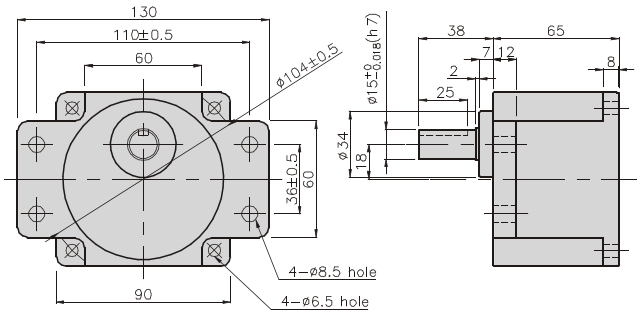

GEARHEAD

K9P□BU

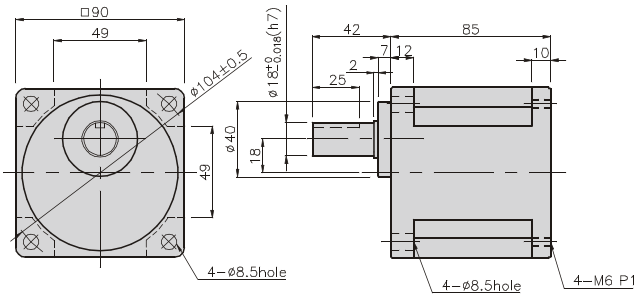

GEARHEAD

K9P□BUF

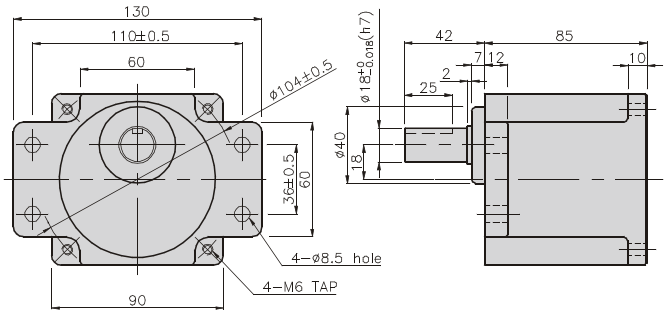

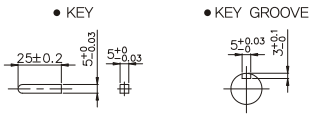

BRAKE MOTOR

GEARHEADS

DIMENSIONS

K9□P150F□-B + K9P□B

K9□P150F□-B + K9P□BF, BUF

K9□P150F□-B + K9P□BU

K9IP150F□-B + K9P□B

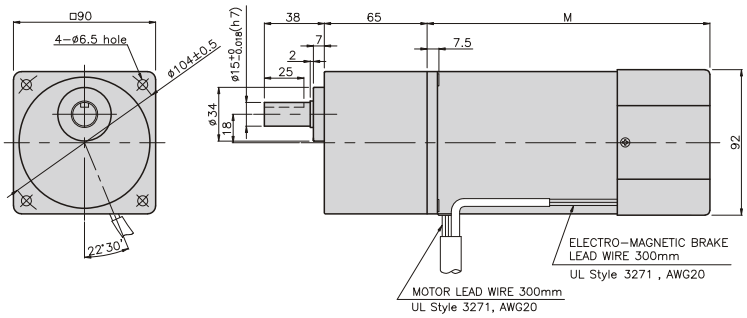

K9IP150F□-B + K9P□BF

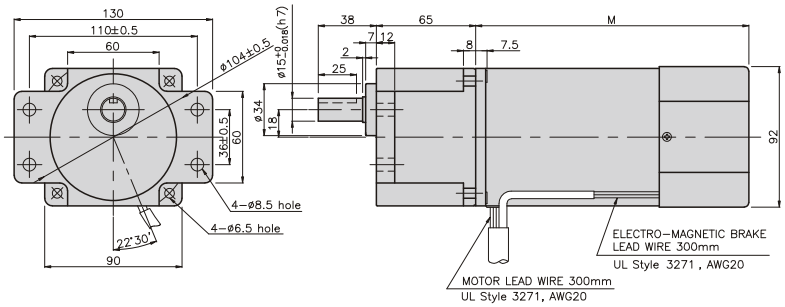

K9IP150F□-B + K9P□BU

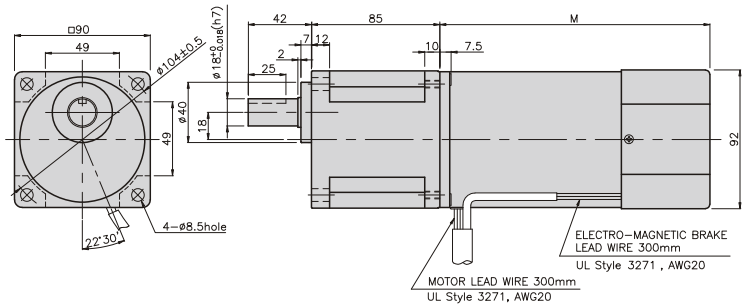

K9IP150F□-B + K9P□BUF

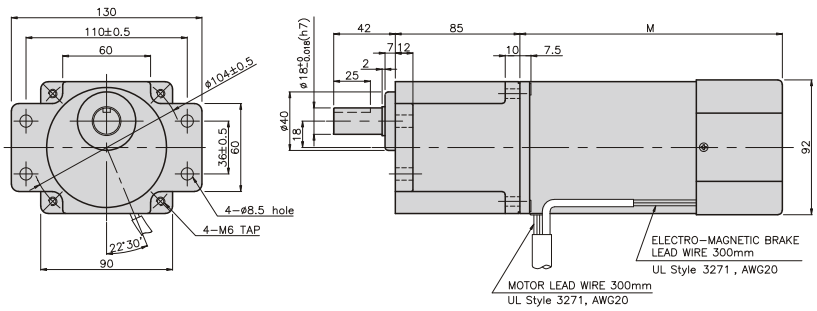

WEIGHT

PART	WEIGHT(kg)
MOTOR	4.38(50Hz)
	3.66(60Hz)
DECIMAL GEAR HEAD	0.62

DIMENSION TABLE

PART No	M	Application Model
01	155	50Hz
02	135	60Hz

DIMENSION TABLE

PART No	L	Application Model	Mounting BOLT
01	65	K9P3~200B	M6 P1.0 X 95
02	40	K9P10BX	M6 P1.0 X 140

WEIGHT

PART	WEIGHT(kg)
K9P3~10B	1.22
K9P12.5~20B	1.32
K9P25~60B	1.42
K9P75~200B	1.45

DIMENSION TABLE

PART No	L	Application Model	Mounting BOLT
01	85	K9P3~200BF	M6 P1.0 X 25
02	40	K9P10BX	M6 P1.0 X 65

WEIGHT

PART	WEIGHT(kg)
K9P3~10BF	1.22
K9P12.5~20BF	1.30
K9P25~60BF	1.42
K9P75~200BF	1.44

DIMENSION TABLE

PART No	L	Application Model	Mounting BOLT
01	85	K9P3~200BU	M6 P1.0 X 20
02	40	K9P10BX	M6 P1.0 X 60

WEIGHT

PART	WEIGHT(kg)
K9P3~10BU	1.44
K9P12.5~20BU	1.55
K9P25~60BU	1.69
K9P75~200BU	1.74

DIMENSION TABLE

PART No	L	Application Model	Mounting BOLT
01	85	K9P3~200BUF	M6 P1.0 X 20
02	40	K9P10BX	M6 P1.0 X 65

WEIGHT

PART	WEIGHT(kg)
K9P3~10BUF	1.50
K9P12.5~20BUF	1.62
K9P25~60BUF	1.76
K9P75~200BUF	1.82

BRAKE MOTOR

180W □90mm

K9□S180F□–B

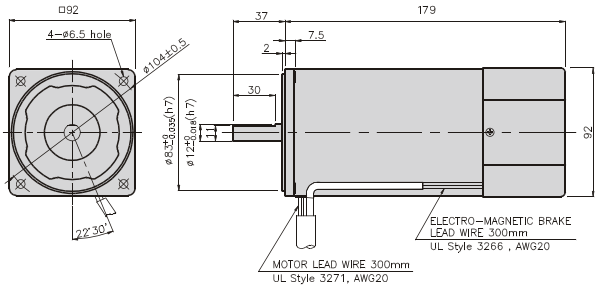

SPECIFICATIONS

180W 30 minutes rating, four poles

Model		Duty	Voltage (V)	Frequency (Hz)	Current (A)	Start T. (N*m/ Kgf*cm)	Rated T. (N*m/ Kgf*cm)	Speed (rpm)	Condenser (μF)	Friction T. (N*m/ (Kgf*cm)
K9R□180FJ–B	single–phase	30 minutes	100	50	3.1	0.7/7	1.35/13.5	1300	40	1/10
				60	2.95	0.75/7.5	1.1/11	1600		
K9R□180FU–B			110	60	2.9	0.85/8.5	1.1/11	1600	40	1/10
			115		3.1					
K9I□180FL–B			200	50	1.47	0.65/6.5	1.35/13.5	1300	12	1/10
				60	1.43	0.55/5.5	1.1/11	1600		
K9R□180FC–B			220	50	1.58	0.65/0.6	1.35/13.5	1300	8	1/10
				60	1.38	0.6/6	1.1/11	1600		
			230	50	1.7	0.7/7	1.35/13.5	1300		
				60	1.54	0.65/6.5	1.1/11	1600		
K9R□180FD–B			240	50	1.2	0.7/7	1.35/13.5	1300	8	1/10

* □ : SHAFT SHAPE (S : STRAIGHT, G : PINION)

RATED TORQUE OF GEARHEAD

● 50Hz

unit = above : N · m / below : kgfcm

Model	Speed(rpm)	600	500	360	300	240	200	180	144	120	100	90	72	60	50	45	36	30	24	20	18	15	12	10	9
Motor/ Gearhead	Ratio	3	3.6	5	6	7.5	9	10	12.5	15	18	20	25	30	36	40	50	60	75	90	100	120	150	180	200
K9RP180F□–B		3.28	3.94	5.47	6.56	8.20	9.84	10.94	12.30	14.76	17.71	19.68	22.14	26.57	30	30	30	30	30	30	30	30	30	30	30
K9P□BU, BUF		32.8	39.4	54.7	65.6	82.0	98.4	109.4	123.0	147.6	177.1	196.8	221.4	265.7	300	300	300	300	300	300	300	300	300	300	300

● 60Hz

unit = above : N · m / below : kgfcm

Model	Speed(rpm)	600	500	360	300	240	200	180	144	120	100	90	72	60	50	45	36	30	24	29	18	15	12	10	9
Motor/ Gearhead	Ratio	3	3.6	5	6	7.5	9	10	12.5	15	18	20	25	30	36	40	50	60	75	90	100	120	150	180	200
K9RP180F□–B		2.67	3.21	4.46	5.35	6.68	8.02	8.91	10.02	12.03	14.43	16.04	18.04	21.65	25.98	28.87	30	30	30	30	30	30	30	30	30
K9P□BU, BUF		26.7	32.1	44.6	53.5	66.8	80.2	89.1	100.2	120.3	144.3	160.4	180.4	216.5	259.8	288.7	300	300	300	300	300	300	300	300	300

* Gearhead and decimal gearhead are sold separately.
* The code in □ of gearhead model is for gear ratio.
* ▬ color indicates that the output shaft of the geared motor rotates in the same direction as the output shaft of the motor. Others indicate rotation in the opposite direction.
* If you are to have less ratio than the ratio in the table, you can install the decimal gearhead, which has one tenth of the ratio, between the gearhead and the motor. In this case, the permissible torque is 30N · m/300kgfcm.
* RPM is based on motor's synchronous rpm (50HZ:1500rpm, 60HZ:1800rpm) and calculated by dividing gear ratio. Actual rpm is 2~20% less than indicating rpm according to load size.

GEARHEADS

CONNECTION DIAGRAMS

Connect Cr circuit for absorbing serge voltage as connection diagram to protect contact point.
Ro = 5 – 200Ω
Co = 0.1 ~ 0.2μF 200WV(400WV)

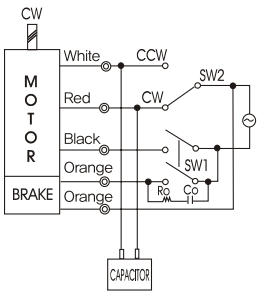

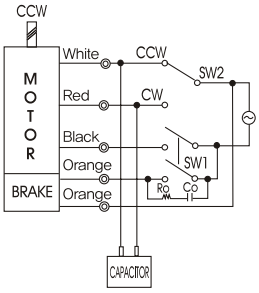

※The direction of motor rotation is as viewed from the front shaft end of the motor

DIMENSIONS

K9P□BU

K9P□BUF

DECIMAL GEARHEAD

K9P10BX

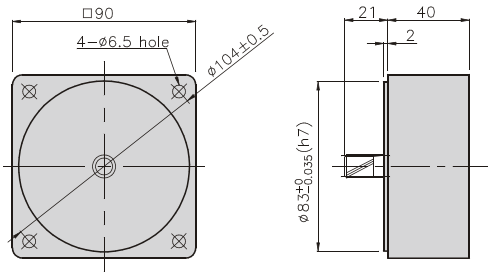

GEARHEAD

K9P□BU

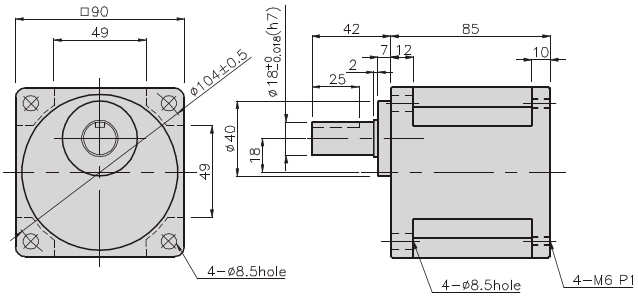

GEARHEAD

K9P□BUF

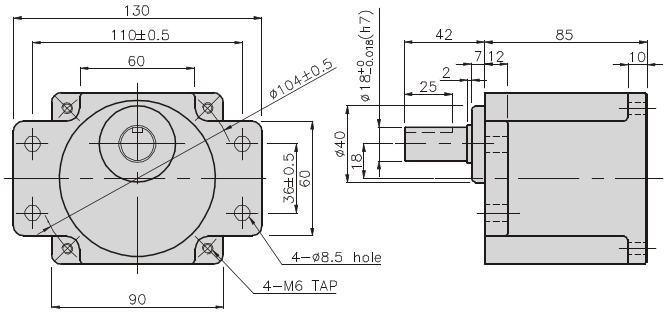

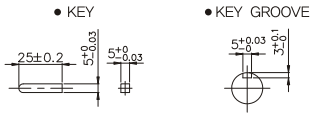

GEARHEADS

DIMENSIONS

K9RP180F□-B + K9P□BU

K9RP180F□-B + K9P□BUF

WEIGHT

PART	WEIGHT(kg)
MOTOR	4.34
DECIMAL GEAR HEAD	0.62

DIMENSION TABLE

PART No	L	Application Model	Mounting BOLT
01	85	K9P3~200B	M6 P1.0 X 20
02	40	K9P10BX	M6 P1.0 X 60

WEIGHT

PART	WEIGHT(kg)
K9P3~10BU	1.44
K9P12.5~20BU	1.55
K9P25~60BU	1.69
K9P75~200BU	1.74

DIMENSION TABLE

PART No	L	Application Model	Mounting BOLT
01	85	K9P3~200BUF	M6 P1.0 X 20
02	40	K9P10BX	M6 P1.0 X 65

WEIGHT

PART	WEIGHT(kg)
K9P3~10BUF	1.50
K9P12.5~20BUF	1.62
K9P25~60BUF	1.76
K9P75~200BUF	1.82

K9RP180F□-B + K9P□BU

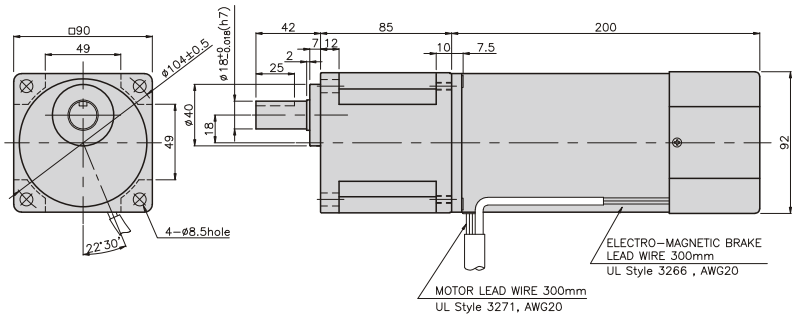

K9RP180F□-B + K9P□BUF

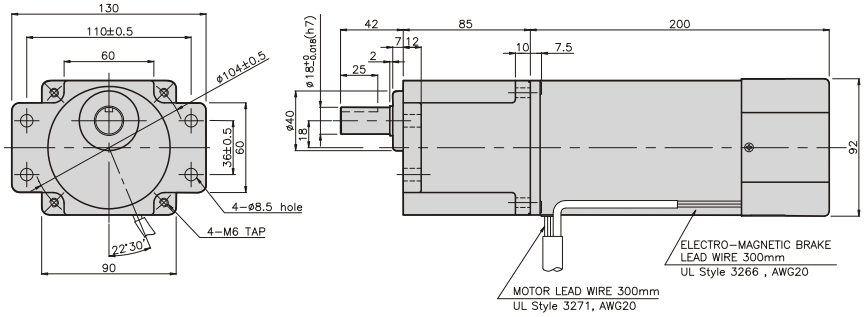

GGM GGM GEARED MOTOR

BRAKE MOTOR

200W □90mm

K9□S200F□–B

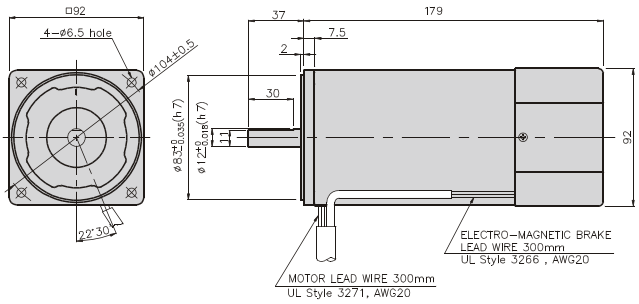

SPECIFICATIONS

200W continuous rating, four poles

Model		Duty	Voltage (V)	Frequency (Hz)	Current (A)	Start T. (N*m/ Kgf*cm)	Rated T. (N*m/ Kgf*cm)	Speed (rpm)	Condenser (μF)	Friction T. (N*m/ (Kgf*cm)
K9I□200FT–B	single–phase	30 minutes	200	50	1.62	4/40	1.5/15	1300	–	1/10
				60	1.29	3.15/31.5	1.22/12.1	1600		
K9I□200FH–B			220	50	1.36	4.25/42.5	1.45/14.5	1350	–	1/10
				60	1.06	3.4/34	1.22/12.2	1600		
			230	50	1.51	4.3/43	1.45/14.5	1350	–	
				60	1.15	3.5/35	1.22/12.2	1600		
K9I□200FM–B			380	50	0.81	4.3/43	1.45/45.5	1350	–	1/10
				60	0.58	3.6/36	1.22/12.2	1600		
K9I□200FV–B			400	50	0.91	4.5/45	1.45/14.5	1350	–	1/10
				60	0.67	4/40	1.22/12.2	1600		
K9I□200FQ–B			415	50	0.62	3.8/38	1.5/15	1300	–	1/10
				60	0.58	3/30	1.26/12.6	1550		
K9I□200FZ–B			440	50	0.68	4.1/41	1.5/15	1300	–	1/10
				60	0.54	3/30	1.22/12.2	1600		

* □ : SHAFT SHAPE (S : STRAIGHT, G : PINION)

RATED TORQUE OF GEARHEAD

● 50Hz

unit = above : N · m / below : kgfcm

Model	Speed(rpm)	500	416	300	250	200	166	150	120	100	83	75	60	50	41	37	30	25	20	16	15	13	10	8.3	7.5
Motor/ Gearhead	Ratio	3	3.6	5	6	7.5	9	10	12.5	15	18	20	25	30	36	40	50	60	75	90	100	120	150	180	200
K9IP200F□–B		3.52	4.23	5.87	7.05	8.81	10.57	11.75	13.21	15.86	19.03	21.14	23.78	28.54	30	30	30	30	30	30	30	30	30	30	30
K9P□BU, BUF		35.2	42.3	58.7	70.5	88.1	105.7	117.5	132.1	158.6	190.3	211.4	237.8	285.4	300	300	300	300	300	300	300	300	300	300	300

● 60Hz

unit = above : N · m / below : kgfcm

Model	Speed(rpm)	600	500	360	300	240	200	180	144	120	100	90	72	60	50	45	36	30	24	20	18	15	12	10	9
Motor/ Gearhead	Ratio	3	3.6	5	6	7.5	9	10	12.5	15	18	20	25	30	36	40	50	60	75	90	100	120	150	180	200
K9IP200F□–B		2.96	3.56	4.94	5.93	7.41	8.89	9.88	11.12	13.34	16.01	17.79	20.01	24.01	28.82	30	30	30	30	30	30	30	30	30	30
K9P□BU, BUF		29.6	35.6	49.4	59.3	74.1	88.9	98.8	111.2	133.4	160.1	177.9	200.1	240.1	288.2	300	300	300	300	300	300	300	300	300	300

* Gearhead and decimal gearhead are sold separately.
* The code in □ of gearhead model is for gear ratio.
* ▬ color indicates that the output shaft of the geared motor rotates in the same direction as the output shaft of the motor. Others indicate rotation in the opposite direction.
* If you are to have less ratio than the ratio in the table, you can install the decimal gearhead, which has one tenth of the ratio, between the gearhead and the motor. In this case, the permissible torque is 30N · m/300kgfcm.
* RPM is based on motor's synchronous rpm (50HZ:1500rpm, 60HZ:1800rpm) and calculated by dividing gear ratio. Actual rpm is 2~20% less than indicating rpm according to load size.

GEARHEADS

CONNECTION DIAGRAMS

Connect Cr circuit for absorbing serge voltage as connection diagram to protect contact point.
Ro = 5 − 200Ω
Co = 0.1 ~ 0.2μF 200WV(400WV)

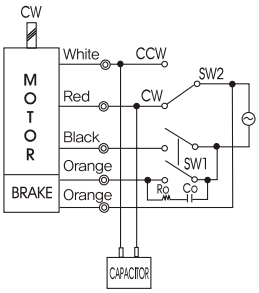

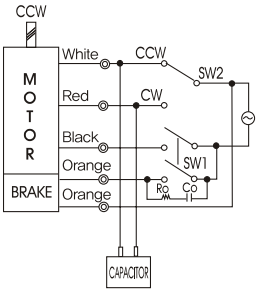

※The direction of motor rotation is as viewed from the front shaft end of the motor

DIMENSIONS

K9P□BU

K9P□BUF

DECIMAL GEARHEAD

K9P10BX

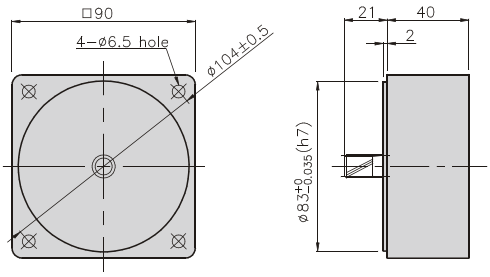

GEARHEAD

K9P□BU

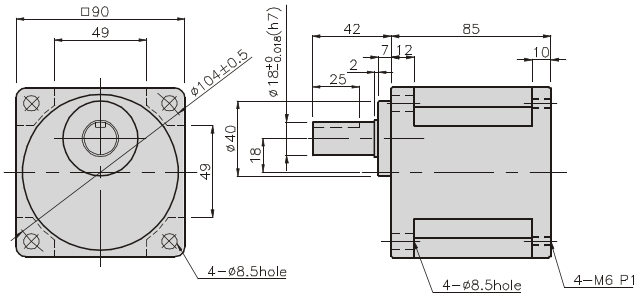

GEARHEAD

K9P□BUF

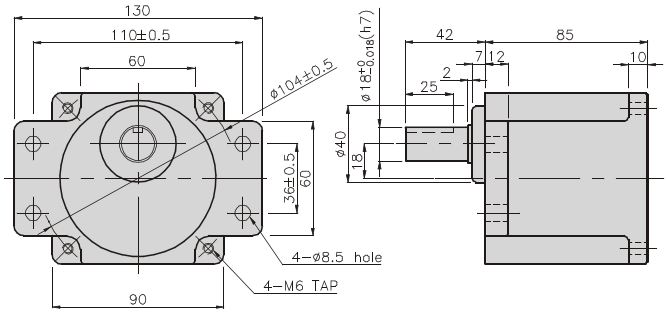

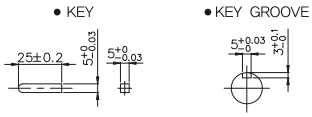

BRAKE MOTOR

GEARHEADS

DIMENSIONS

K9□P200F□ + K9P□BU

K9□P200F□ + K9P□BUF

K9IP200F□-B + K9P□BU

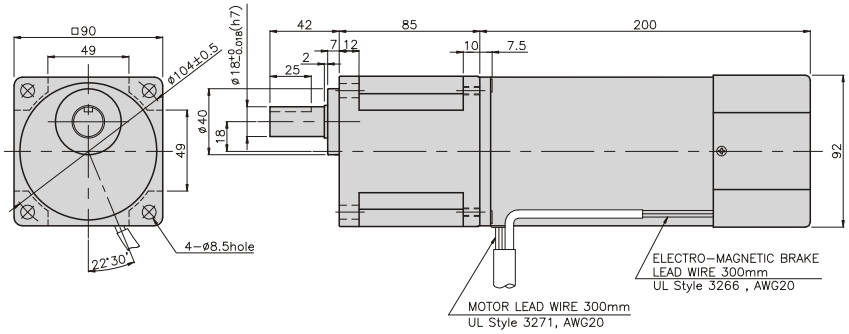

WEIGHT

PART	WEIGHT(kg)
MOTOR	4.38
DECIMAL GEAR HEAD	0.62

DIMENSION TABLE

PART No	L	Application Model	Mounting BOLT
01	85	K9P3~200BU	M6 P1.0 X 20
02	40	K9P10BX	M6 P1.0 X 60

WEIGHT

PART	WEIGHT(kg)
K9P3~10BU	1.44
K9P12.5~20BU	1.55
K9P25~60BU	1.69
K9P75~200BU	1.74

DIMENSION TABLE

PART No	L	Application Model	Mounting BOLT
01	85	K9P3~200BUF	M6 P1.0 X 20
02	40	K9P10BX	M6 P1.0 X 65

WEIGHT

PART	WEIGHT(kg)
K9P3~10BUF	1.50
K9P12.5~20BUF	1.62
K9P25~60BUF	1.76
K9P75~200BUF	1.82
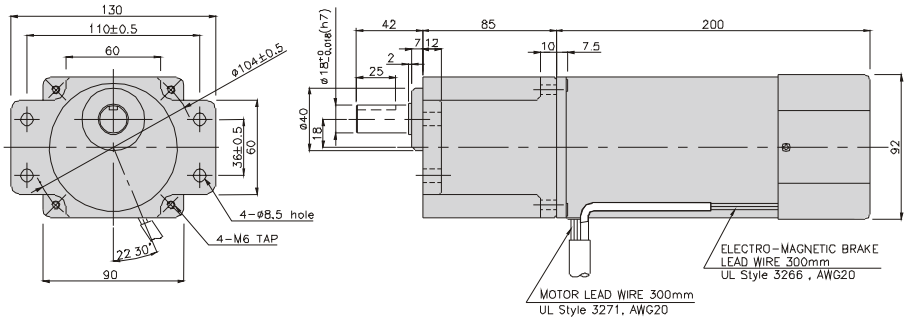
K9IP200F□-B + K9P□BUF